GÜDEL

High Precision Planetary Gearboxes

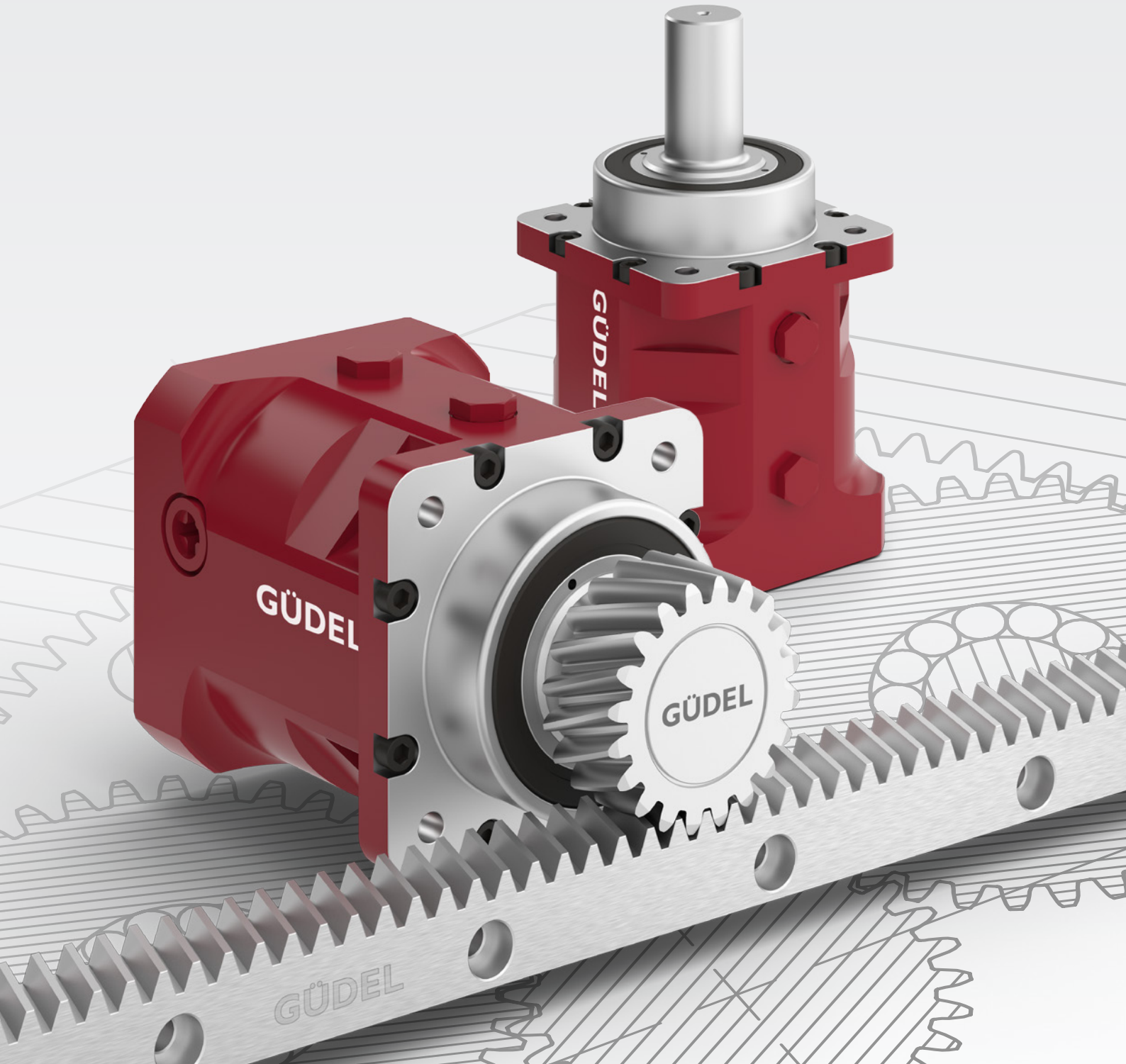

Dear Customers,

We are delighted to present you our catalogue, which showcases the new Güdel planetary gearboxes in three ranges and five sizes. As a leading manufacturer of linear, drive and system technology with more than 60 years' experience, we offer you a broad spectrum of automation products and services.

Our catalogue opens with an overview of the three ranges and five sizes and explains the main parameters for the selection: torque, speed, duty cycle and precision. You can then browse a variety of input and output solutions and use our configuration matrix to select and define the right product.

Güdel planetary gearboxes with integrated output pinion in combination with Güdel high precision racks create an attractive function package from a single manufacturer and partner, called 'Your ideal Drive Train'.

Thanks to our high level of vertical manufacturing, extensive know-how and many years of high-grade application experience, we are able to professionally support your individual needs.

In the main body of the catalogue, all technical data and features of each product are presented in a user-friendly double-page spread. Please also look at the pages with the designation code and its explanatory notes, as well as at the choice of the appropriate motor interface.

Finally you will find a number of pages with flowcharts and detailed sizing procedures. These will guide you in the selection of the appropriate product for your application. Please keep in mind, that our sales engineers are keen on supporting you with their tools and their experience – just get in contact with us!

Committed to quality and to continuous improvement, we make every effort to constantly develop our products and our services. Parallel to this, in the near future we are going to expand our family of planetary gearboxes with new ranges and new features. Please contact our sales engineers for more information.

We hope that reading this catalogue will be a pleasure for you. It might give you inspiration for new applications – but also security while selecting an appropriate product for your day-to-day business. We are looking forward to becoming your partner – thank you for choosing Güdel.

Best regards,

Walter Zulauf
CTO Güdel Group AG

Nicolas Laval
CEO Güdel Sumer SAS

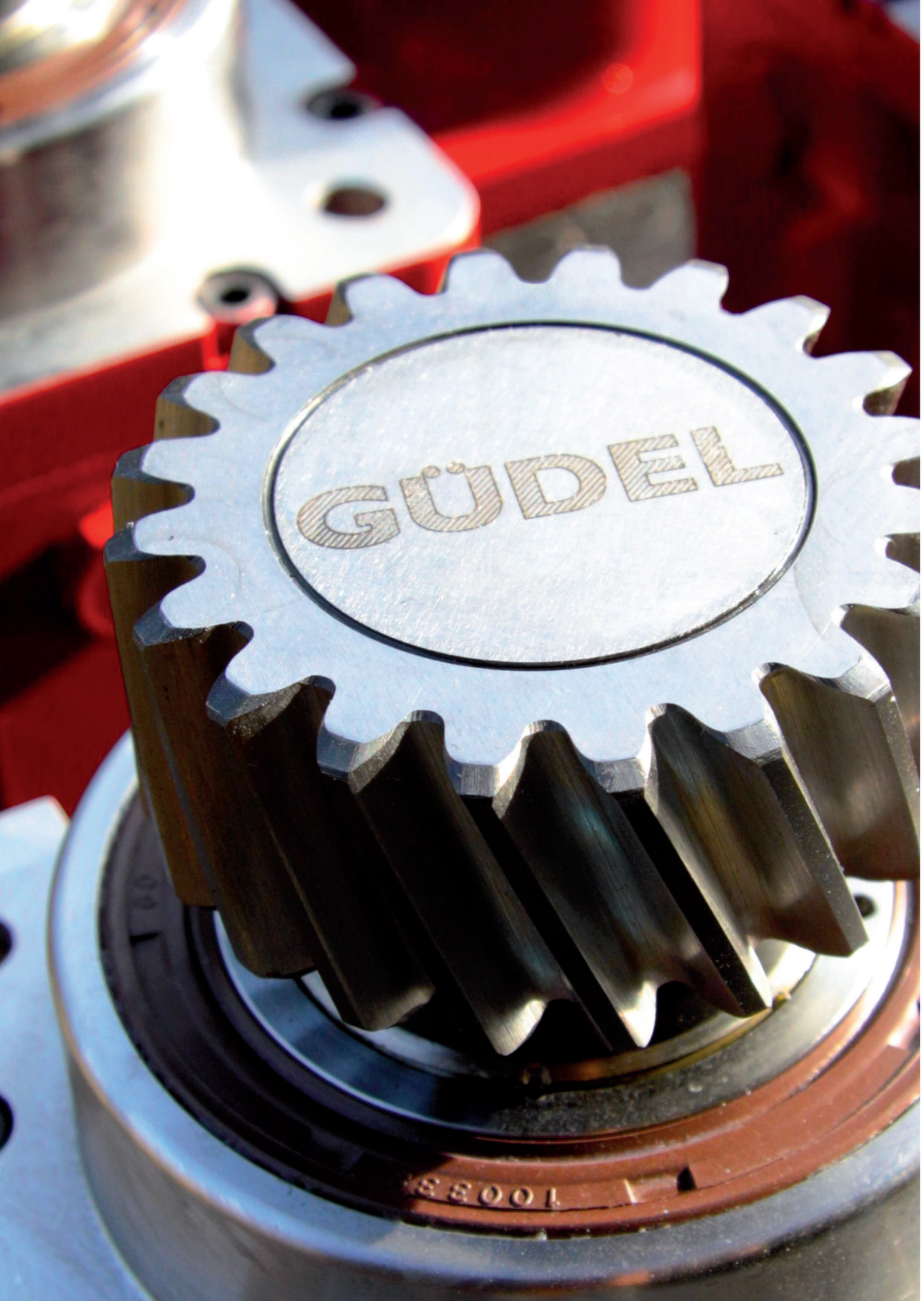

Content

High Precision Planetary Gearboxes

Product Overview Take five – The Product at a Glance 6

Performance Three Ranges for your Torque & Duty Cycle Requirements 8

Preselection Make your Decision – Range, Speed & Torque 10

Inputs Great Adaptability – Standard & Optional Inputs 12

Outputs Unlimited Flexibility – Standard & Optional Outputs 14

Positioning Reliability – Regardless of the Mounting Position 16

Function Packages Your ideal Drive Train – Gearbox, Rack & Pinion 18

Configuration Find your right Size, Performance & Configuration 20

Technical Datasheets

Size 080 24

Size 100 38

Size 140 52

Size 180 66

Size 240 80

Pinion 94

Rack 95

Technical Information

Order Reference Describe the Code of your Planetary Gearbox 98

Order Reference Choose your appropriate Motor Interface 100

Flowcharts Calculate your Planetary Gearbox 102

Flowcharts Calculate your ideal Drive Train 106

Appendix

Güdel worldwide Contact Details & Links 110

Take five –
The Product at a Glance

Due to their outstanding properties, planetary gearboxes are used in all kind of industrial applications. Güdel high precision planetary gearboxes ideally cover demanding requirements – details are presented on the technical information pages.

Quick delivery – Our philosophy is to have all parts on stock.

Precision – With regard to angular backlash, our long experience in the conception and the manufacturing of high performance gearboxes gives us the ability to provide all products in four different precision classes: 1, 3, 5 and 12 arcmin. On request 0.5 arcmin can be supplied.

Sizes – Our portfolio includes five sizes: 080, 100, 140, 180 and 240. In addition to this catalogue, we also offer other sizes with separate documentation.

Ratios – A wide range of ratios can be selected – starting from 3 up to 1000. Depending on the ratio the gearbox will either have one, two or three stages.

Ratios

We have planetary gearboxes in several different stages (ratios). The number of stages depends on the desired ratio. Stages 1 to 3 are presented on the technical information pages.

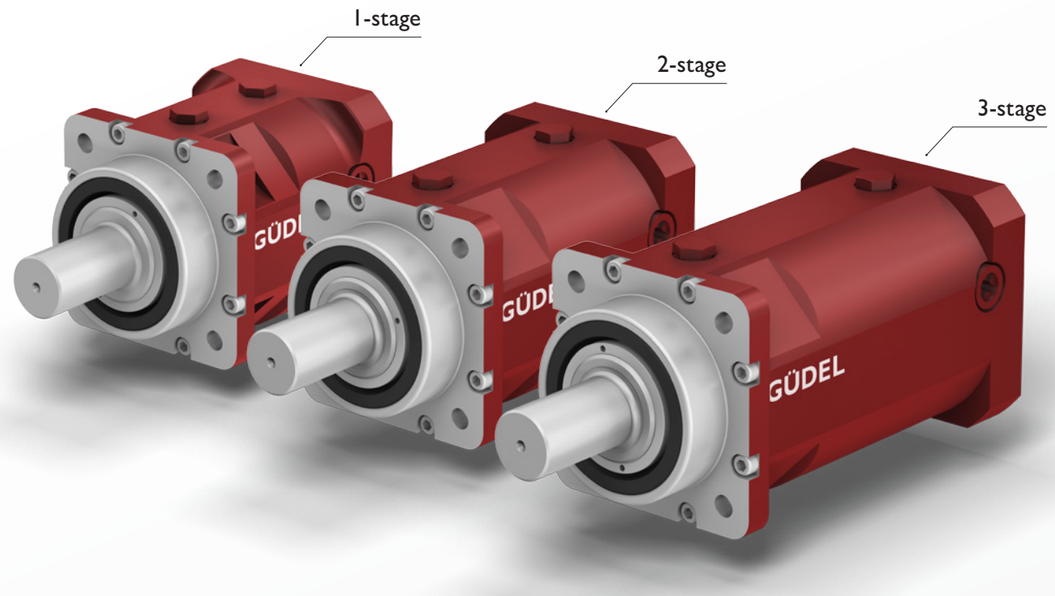

Sizes

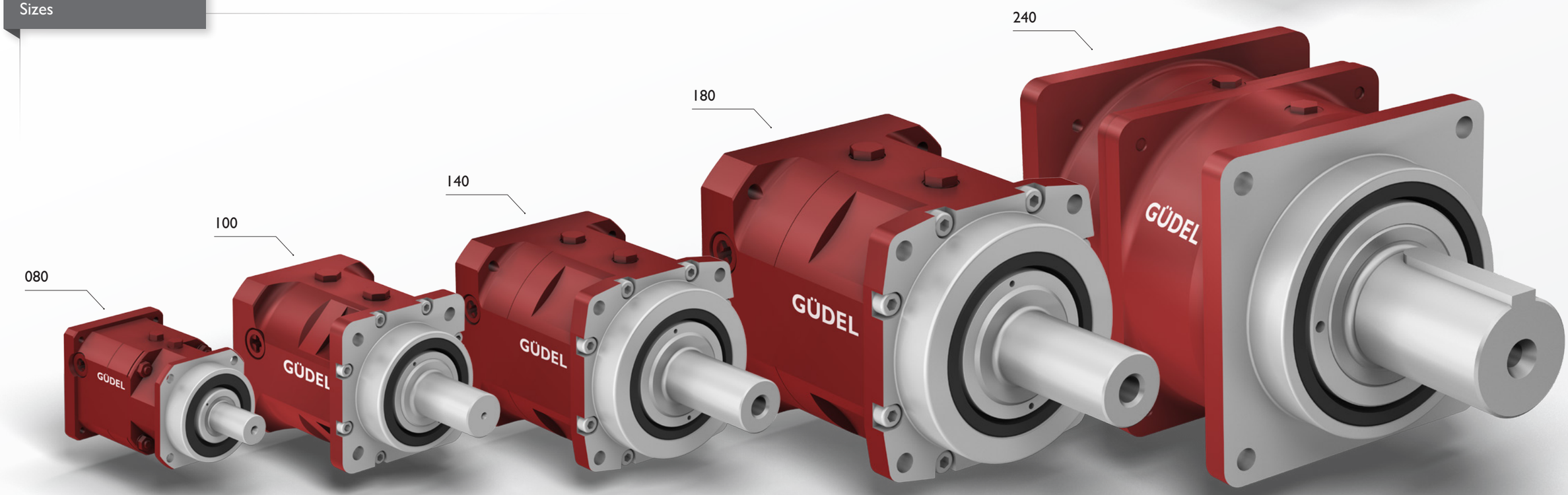

Three Ranges for your Torque & Duty Cycle Requirements

Our three ranges, NR, SR, and PR, provide you with a wide torque spectrum. The 240 size can reach 5600 Nm.

The NR range is typically dedicated to high performance applications where a combination of torque, speed, precision and high-level duty cycle is required.

The SR and PR ranges focus specifically on high torque or even hyper torque which needs to be performed in a limited space.

Typically for each gearbox size, the three ranges NR, SR and PR have the same body. Minor variations at the output adapt the product to the higher torque capacity.

Performance Overview

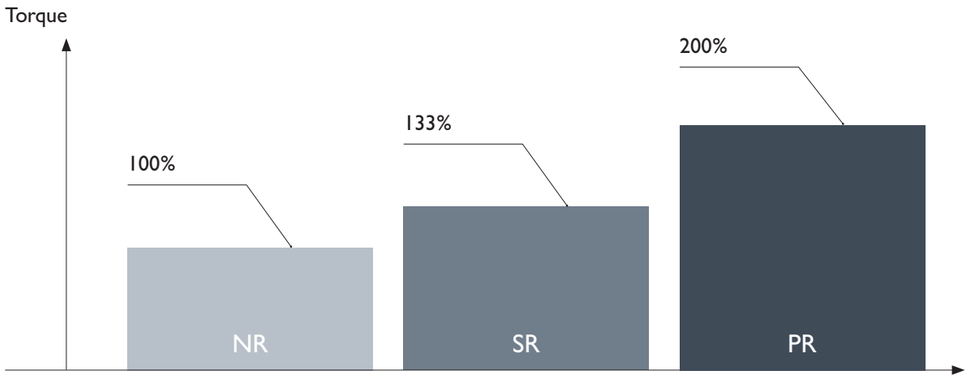

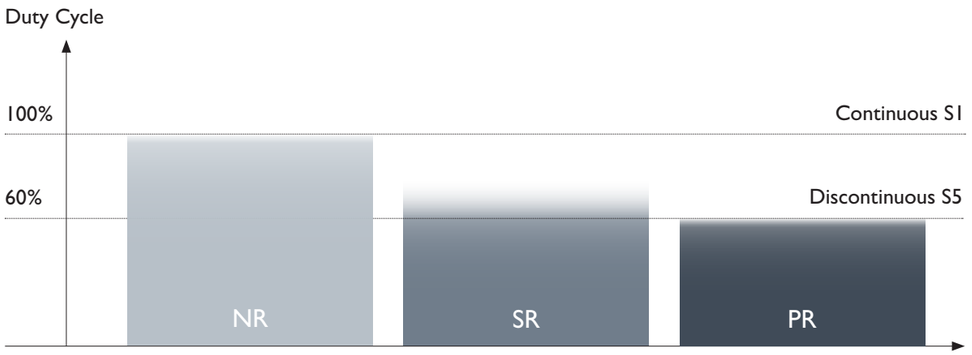

NR Range – for High Performance

For use in most applications that require torque, precision and high speed operation in continuous S1 and discontinuous S5 duty cycles.

SR Range – for High Torque

Without an increase in size, the SR range provides 33% more torque than the NR range and is used in discontinuous duty cycles of up to S5 and more.

PR Range – for Hyper Torque

Without an increase in size, the PR range operates with 100% more torque than the NR and is used in discontinuous duty cycles of up to S5.

Make your Decision – Range, Speed & Torque

This double-page spread enables you to make a preselection from the three main ranges. Base your selection on the important features of your requirements – torque, dimensions, duty cycle, angular backlash, ratio and speed – and find the correct type of gearbox for your application.

Ranges

		High Performance NR					High Torque SR					Hyper Torque PR				
Torque		100%					around 133%					around 200%				
Dimensions	Body	Standard					Standard					Upgrade				
	Centering & Shaft	Standard					Upgrade					Upgrade				
Duty Cycle	S5	60%					60%					60%				
	S1	100 %					–					–				
Angular backlash	Precision	P 0.5	P 1	P 3	P 5	P 12	P 0.5	P 1	P 3	P 5	P 12	P 0.5	P 1	P 3	P 5	P 12
	arcmin	≤ 0,5	≤ 1	≤ 3	≤ 5	≤ 12	≤ 0,5	≤ 1	≤ 3	≤ 5	≤ 12	≤ 0,5	≤ 1	≤ 3	≤ 5	≤ 12
Ratio *	1-stage	3, 4, 5, 7, 10					4					3				
	2-stage	12, 16, 20, 25, 30, 35, 40, 50, 70, 100					12, 16, 20, 28, 40					9, 12, 15, 21, 30				
	3-stage	105, 125, 175, 200, 250, 300, 400, 500, 700, 1000					60, 80, 100, 112, 120, 140, 160, 200, 280, 400					36, 45, 60, 75, 90, 105, 120, 150, 210, 300				

* Other ratios are available on request.

The diagrams below will support the preselection of the NR, SR or PR range.
Select NR if your application is dedicated to high speed and critical duty cycle.
Select SR or PR if your application is dedicated to high torque or hyper torque.
The examples here are based on ratio I2 in a discontinuous duty cycle S5.
Comparison of maximum speed n_{1max} of the three ranges
Comparison of the acceleration torque T_{2B} of the three ranges

Speed

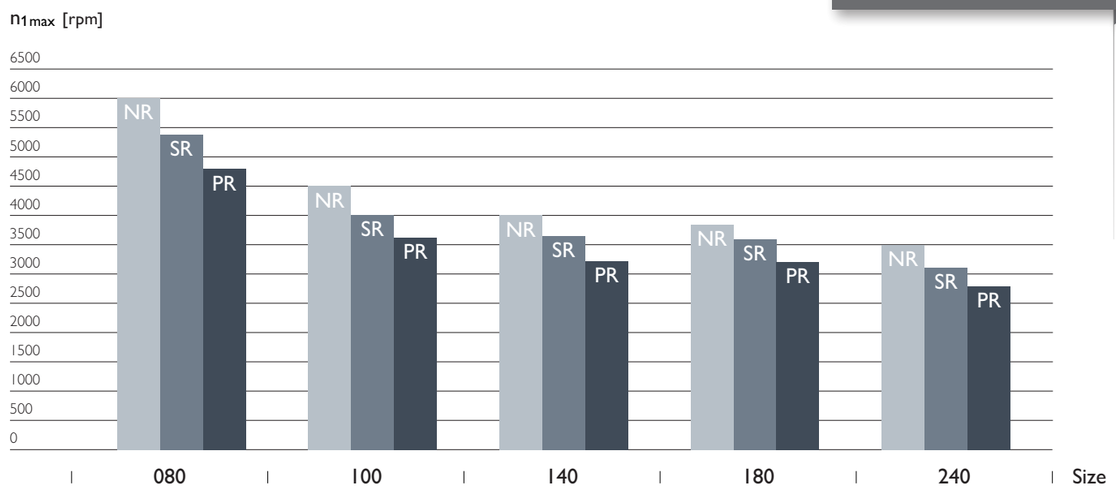

Torque

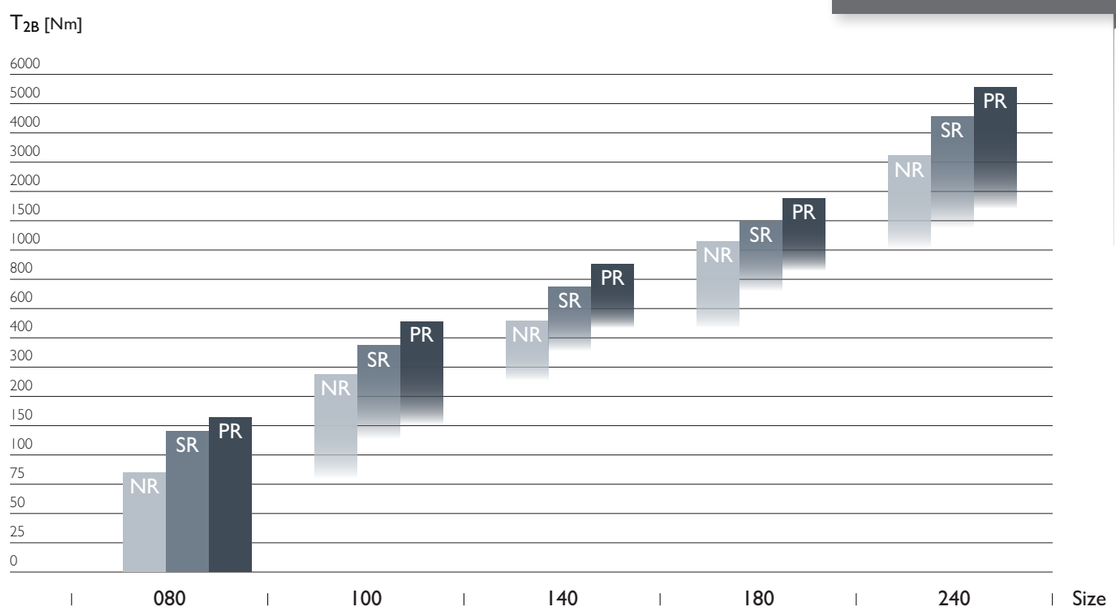

Great Adaptability – Standard & Optional Inputs

Due to our modular system all common servo motors can be easily mounted on our planetary gearboxes. Optional inputs such as primary shaft can be provided on request.

We have a standard flange solution for the most commonly used servo motors. We offer a total of three standard input versions: A, B and C. Your selection of an input will depend on the geometric dimensions of the motors that you use.

Input Motor Flange

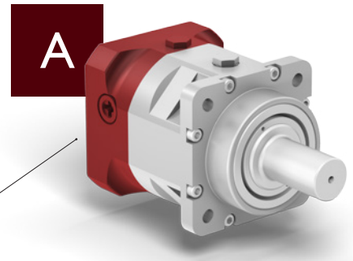

Small Motor

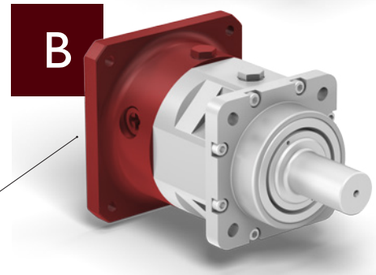

Medium Motor

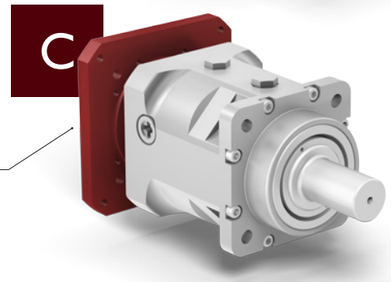

Long Motor

Standard Inputs

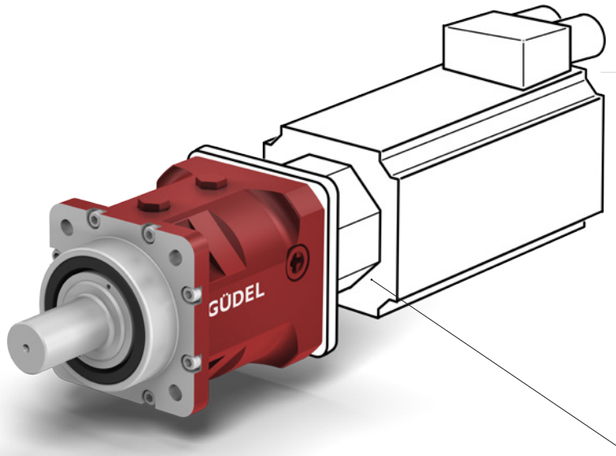

AM – Motor Adaptability

Optional Inputs

For special applications, in which the motor cannot be directly mounted on the gearbox, it is possible to fit the gearbox with an input shaft as an optional input.

Example AL

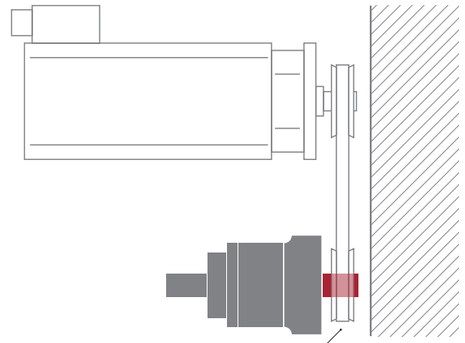

AL – Smooth Primary Shaft

Example AC

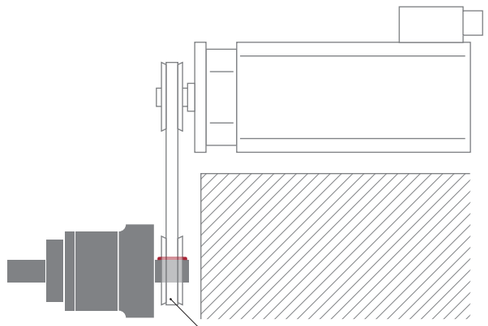

AC – Keyway Primary Shaft

Unlimited Flexibility – Standard and Optional Outputs

To suit your requirements, our gearbox family offers you six output solutions to cover a maximum of possible applications. Three standard outputs are available from stock, while three optional outputs are available on request. Please do not hesitate to contact us if your application requires a solution which is not part of the presented package.

Standard Outputs

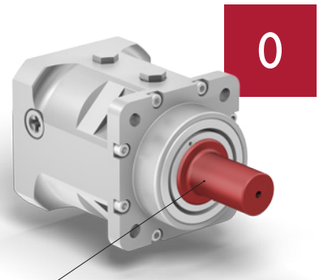

Smooth Output Shaft
The reference standard output with dimensions according to market standards.

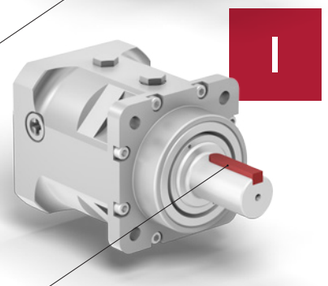

Keyway Output Shaft
A keyway according to DIN 6885 can be added to the smooth shaft.

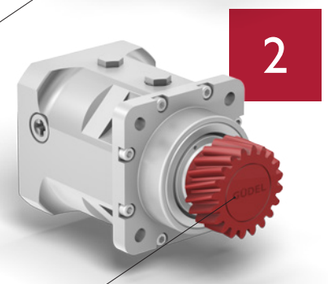

Integrated Output Pinion
The integrated output pinion is a unique solution – combining rack, pinion and gearbox. This function package creates an ideal drive train.

Optional Outputs

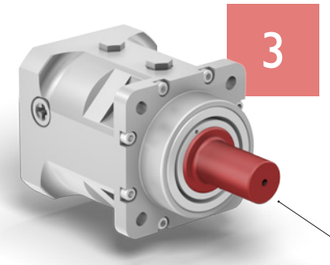

Customized Output Shaft
Please contact us, if the standard output shafts do not meet your specification.

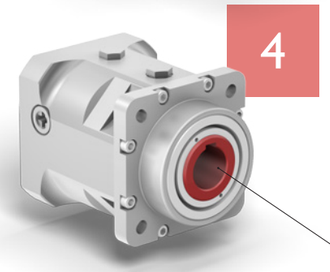

Hollow Keyway Output
On request we provide you with a hollow keyway output. Please find our proposals on the technical information pages.

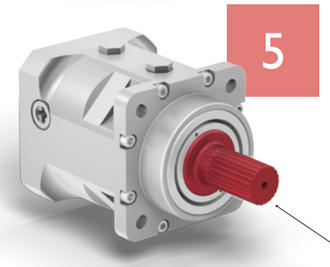

Splined Output Shaft
Splined output shafts are available on request. Please specify dimensions as well as type of spline (standard) and tolerances required.

Reliability – Regardless of the Mounting Position

You can universally use our high-performance planetary gearboxes regardless of the mounting position. No matter whether your application requires a horizontal output, vertical with upright-facing output or vertical with downside-facing output – the universal TP-version covers any orientation.

For specific applications, including continuous operation SI together with high input speed, we recommend the use of an additional air-vent plug (breather). This air-vent plug can be installed at any time – even as a retrofit on installed gearboxes.

In order to optimize the performance, we recommend specifying the real mounting position VI, V2 or HI in the case of critical applications – especially for ratios requiring a 3-stage gearbox.

Mounting Position

TP – All Positions

VI – Vertical Upright Position

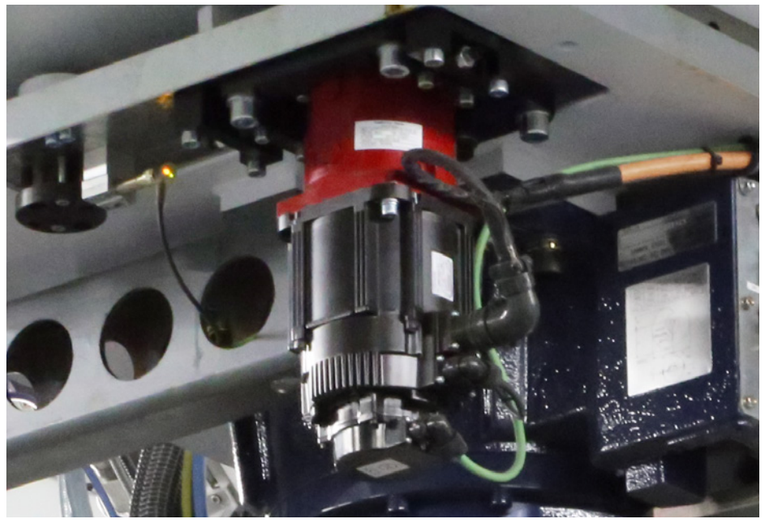

V2 – Vertical Downside Position

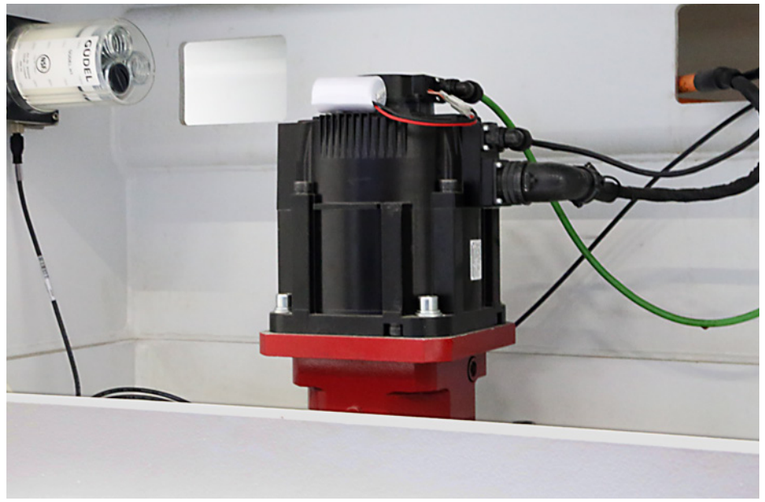

HI – Horizontal Position

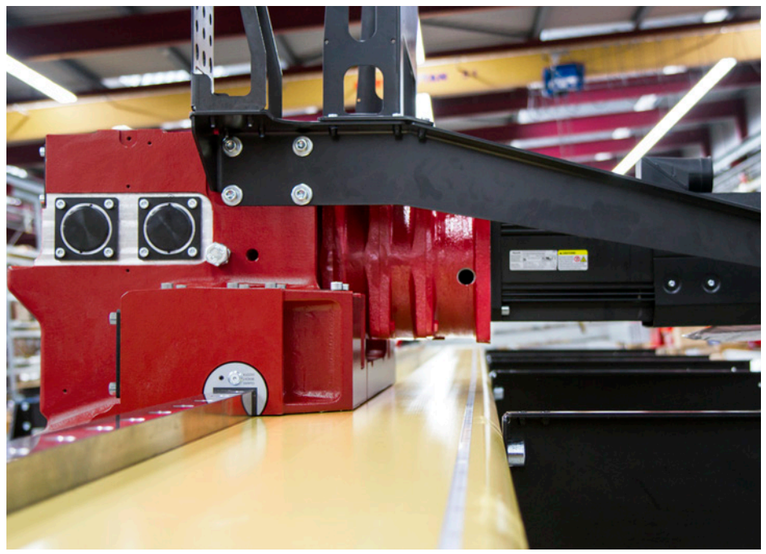

Your ideal Drive Train – Gearbox, Rack & Pinion

Güdel planetary gearboxes with an integrated output pinion, together with a Güdel rack create a function package that can be easily integrated as an ideal drive train: compact, performing, robust and efficient.

As all these components are conceived, designed and manufactured by Güdel, we guarantee perfect matching as well as a high performance for the entire drive train.

The ideal drive train is dedicated to applications requiring speed, dynamics, precision and long travel-paths, such as all kinds of cutting processes (plasma, laser, flame-cut, water-jet, glass, textile), light and medium machine tools, wood processing machines, robotics and handling devices.

For applications in the food, pharmaceutical or clean-room sectors, we can supply you with a wide range of components with coatings or in stainless steel, as well as with specific lubricants and paintings. Please do not hesitate to contact us, if the products shown in this catalogue do not fit your requirements.

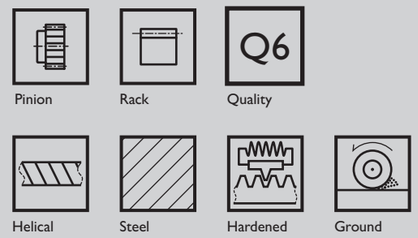

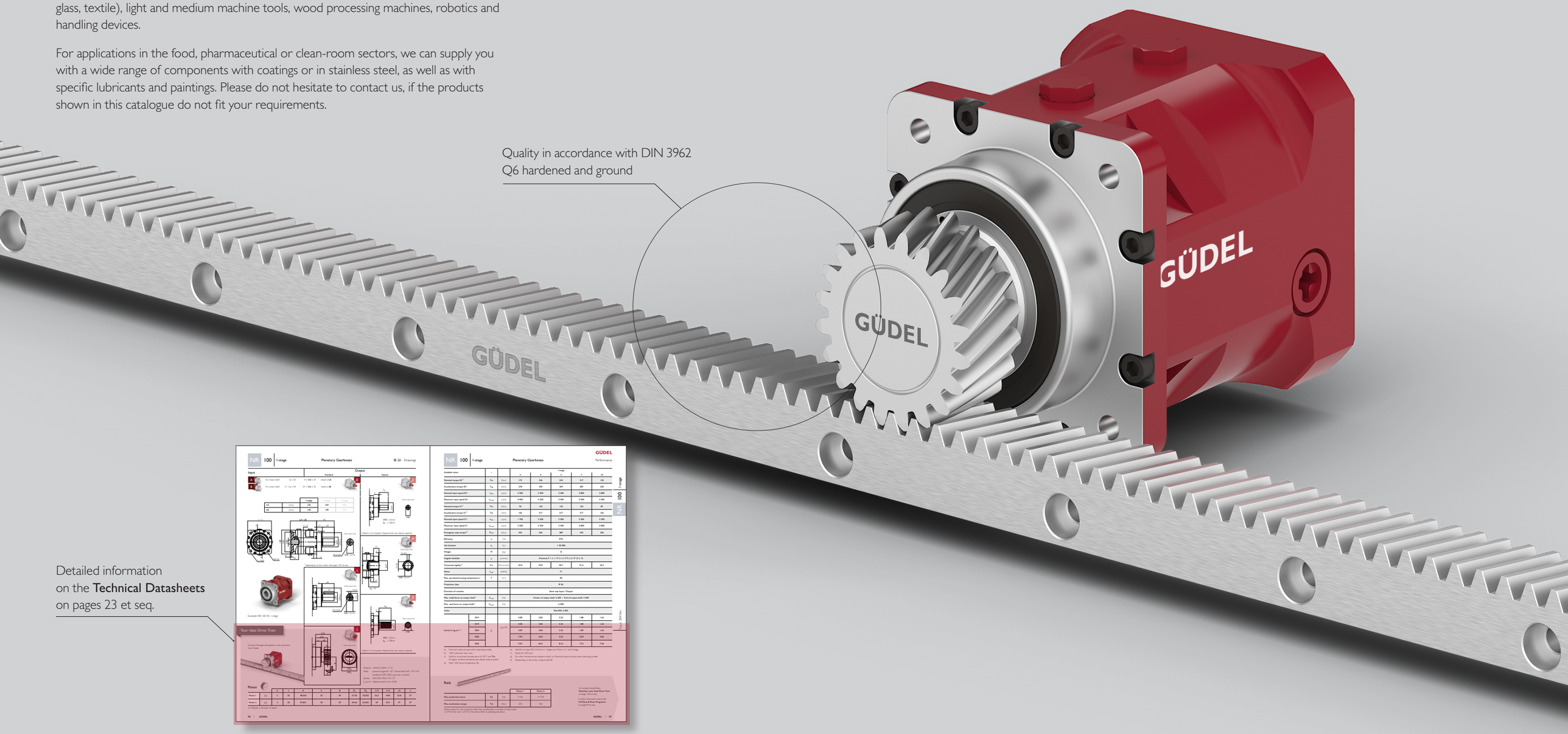

Detailed information on the **Technical Datasheets** on pages 23 et seq.

Find your right Size, Performance & Configuration

Size	High Performance NR			High Torque SR			Hyper Torque PR		
	T_{2B} [Nm]	Stage	Page	T_{2B} [Nm]	Stage	Page	T_{2B} [Nm]	Stage	Page
080	≤100	1	24-25	≤ 150	1	30-31	≤ 160	1	34-35
		2	26-27		2			2	
		3	28-29		3	32-33		3	36-37
100	≤ 304	1	38-39	≤ 404	1	44-45	≤ 556	1	48-49
		2	40-41		2			2	
		3	42-43		3	46-47		3	50-51
140	≤ 600	1	52-53	≤ 750	1	58-59	≤ 900	1	62-63
		2	54-55		2			2	
		3	56-57		3	60-61		3	64-65
180	≤ 1150	1	66-67	≤ 1500	1	72-73	≤ 1925	1	76-77
		2	68-69		2			2	
		3	70-71		3	74-75		3	78-79
240	≤ 3800	1	80-81	≤ 4800	1	86-87	≤ 5600	1	90-91
		2	82-83		2			2	
		3	84-85		3	88-89		3	92-93

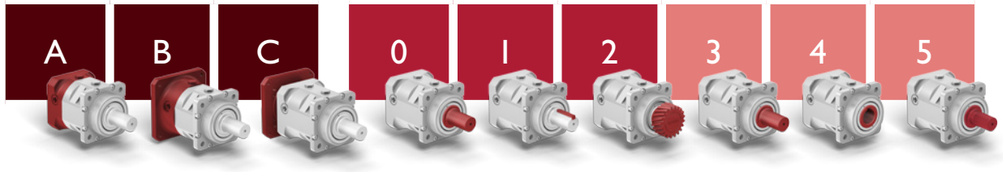

Size	Standard Inputs			Standard Outputs			Optional Outputs		
	Small	Medium	Long	Smooth	Keyway	Pinion	Custom.	Hollow	Splined
080	•	•	*	•	•	•	•	•	•
100	•	•	*	•	•	•	•	•	•
140	•	•	•	•	•	•	•	•	•
180	•	•	•	•	•	•	•	•	•
240	•	•	*	•	•	•	•	•	•

• Available / * We provide additional flanges for bigger motors on request.


GÜDEL
GÜDEL
TECH

Input

A	for motor shaft	L ≤ 45	6 ≤ Ød ≤ 19	result in LA
B	for motor shaft	45 < L ≤ 55	19 < Ød ≤ 24	result in LB

Output

Standard

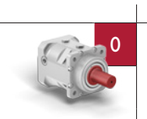

		1-stage	2-stage	3-stage
LA	[mm]	106.5	128.5	150.5
LB	[mm]	116	138	160

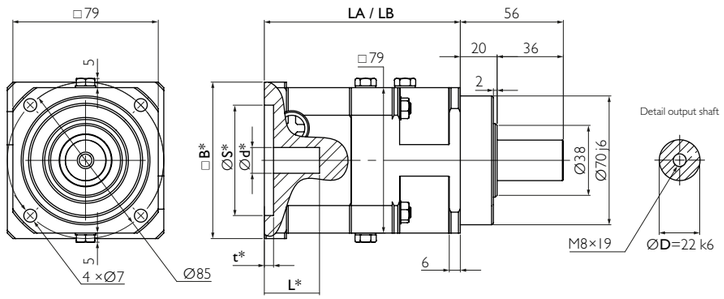

* depending on the motor. See pages 100 et seq.

Example NR 080 A0, 1-stage

Option 0

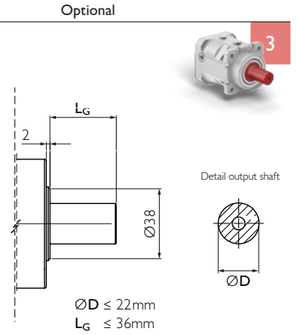

Option 3 on request. Adjustments can reduce capacity.

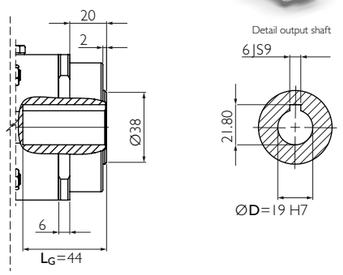

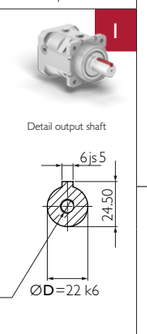

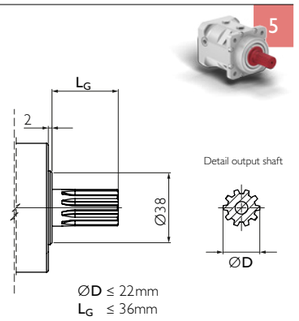

Option 5 on request. Adjustments can reduce capacity.

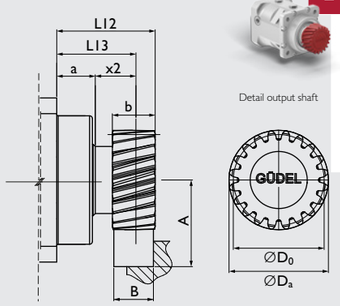

Material	16MnCr5 DIN 1.7131
Teeth	pressure angle α = 20°, helical teeth left, 19°31'42"
	hardened (58$^{+4}_{0}$ HRC), ground, crowned
Quality	6f24 DIN 3962 / 63 / 67
f_p [mm]	Adjacent pitch error 0.006

Your ideal Drive Train

Function Package with gearbox, rack and pinion from Güdel

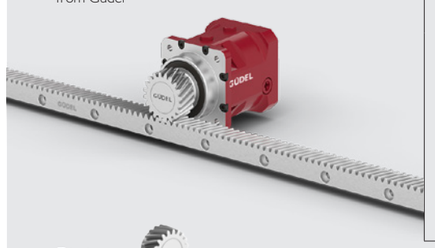

Pinion

		m	z	A	b	B	D_a	D_0	L12	L13	x2	a
Pinion I	[-]	2	20	43.221	25	24	46.44	42.441	52.5	40	20	20

m: Module, z: Number of teeth

GÜDEL

Available ratios		i		1-stage 3	4	5	7	10
Nominal torque S5 a)		T_{2N}	[Nm]	60	68	68	68	54
Acceleration torque S5 b)		T_{2B}	[Nm]	80	100	100	100	82
Nominal input speed S5 c)		n_{1N}	[rpm]	2 900	2 900	2 900	3 100	3 100
Maximum input speed S5		n_{1max}	[rpm]	5 000	6 000	6 000	6 000	6 000
Nominal torque S1 a)		T_{2N}	[Nm]	25	46	46	46	25
Acceleration torque S1 b)		T_{2B}	[Nm]	40	71	71	71	45
Nominal input speed S1 c)		n_{1N}	[rpm]	2 000	2 600	2 600	2 800	2 800
Maximum input speed S1		n_{1max}	[rpm]	2 900	2 900	2 900	3 100	3 100
Emergency stop torque d)		T_{2not}	[Nm]	200	250	250	220	177
Efficiency		η	[%]	97%				
Life duration		L_h	[h]	> 20 000				
Weight		M	[kg]	4				
Angular backlash		j_t	[arcmin]	Precision **P 1** ≤ 1 / **P 3** ≤ 3 / **P 5** ≤ 5 / **P 12** ≤12				
Torsionnal rigidity e)		C_{t2}	[Nm/arcmin]	10.6	11.2	11.3	11.5	10.3
Noise i)		L_{pA}	[dB(A)]	≤ 68				
Max. permitted housing temperature g)		T	[°C]	90				
Protection class				IP 65				
Direction of rotation				Same way Input / Output				
Max. radial force on output shaft f)		F_{rmax}	[N]	Center of output shaft: 4 200 / End of output shaft: 3 285				
Max. axial force on output shaft f)		F_{amax}	[N]	3 600				
Color				Red RAL 3003				
Inertia in kg.cm² h)	Ø11	J_1	[kgcm²]	0.62	0.46	0.40	0.35	0.31
	Ø14			1.18	1.02	0.95	0.90	0.87
	Ø19			1.19	1.03	0.97	0.91	0.88
	Ø24			2.01	1.85	1.78	1.73	1.70

a) Nominal output torque when operating at n_{1N}.
b) 1000 cycles per hour max.
c) Valid for an ambient temperature of 20°C and T_{2N}. At higher ambient temperatures, please reduce speed.
d) Valid 1000 times the gearbox life.
e) Valid for an input Ø of 19mm in 1-stage and 14mm in 2- and 3-stage.
f) Values for 300 rpm.
g) For other temperatures, please contact us. Nominal output torque when operating at n_{1N}.
h) Depending on the motor output shaft Ø.
i) With i=10 and n_{1N}=3000 rpm no load.

T_{2B} ≤ 100 Nm

Rack

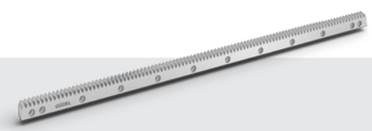

			Pinion I
Max acceleration force	F_{2B}	[N]	7 480
Max acceleration torque	T_{2B}	[Nm]	159

Above values for rack and pinion take into consideration a number of load cycles: 1×10^6 for the rack; 1×10^7 for the pinion. Both in pulsating operation.

For proper sizing follow Flowchart **Calculate your ideal Drive Train** on pages 106 et seq.

More on the Technical Datasheets **Your ideal Drive Train** on pages 94 et seq.

Input

A	for motor shaft	L ≤ 45	6 ≤ Ød ≤ 19	result in **LA**
B	for motor shaft	45 < L ≤ 55	19 < Ød ≤ 24	result in **LB**

Output

Standard

		1-stage	2-stage	3-stage
LA	[mm]	106.5	128.5	150.5
LB	[mm]	116	138	160

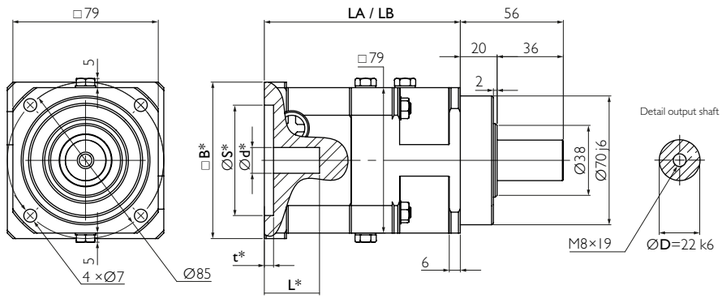

* depending on the motor. See pages 100 et seq.

Example NR 080 A0, 2-stage

0

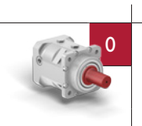

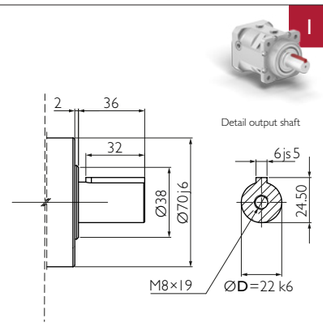

1

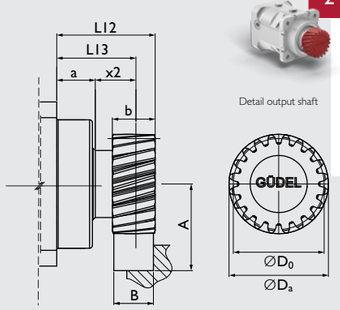

2

Optional

3

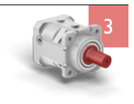

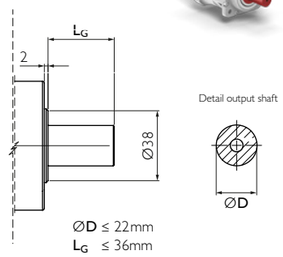

Option 3 on request. Adjustments can reduce capacity.

4

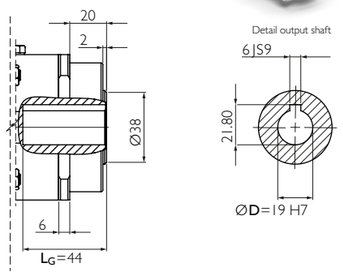

5

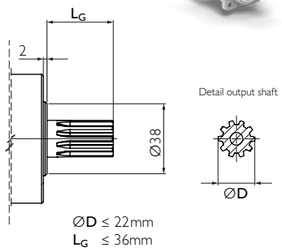

Option 5 on request. Adjustments can reduce capacity.

Your ideal Drive Train

Function Package with gearbox, rack and pinion from Güdel

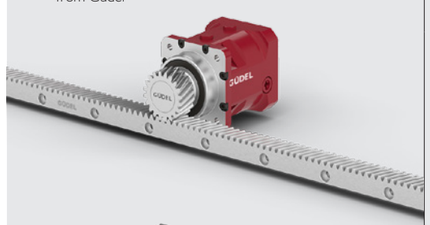

Material	16MnCr5 DIN 1.7131
Teeth	pressure angle α = 20°, helical teeth left, 19°31'42" hardened (58$^{+4}_{0}$ HRC), ground, crowned
Quality	6f24 DIN 3962 / 63 / 67
f_p [mm]	Adjacent pitch error 0.006

Pinion

		m	z	A	b	B	D_a	D_0	L12	L13	x2	a
Pinion 1	[-]	2	20	43.221	25	24	46.44	42.441	52.5	40	20	20

m: Module, z: Number of teeth

Available ratios *		i		2-stage 12	16	20	25	30	35	40	50	70	100
Nominal torque S5 a)		T_{2N}	[Nm]	60	68	68	68	60	68	68	68	68	54
Acceleration torque S5 b)		T_{2B}	[Nm]	80	100	100	100	80	100	100	100	100	82
Nominal input speed S5 c)		n_{1N}	[rpm]	3 300	3 500	3 500	3 500	3 500	3 500	3 500	3 800	4 500	4 500
Maximum input speed S5		n_{1max}	[rpm]	6 000	6 000	6 000	6 000	6 000	6 000	6 000	6 000	6 000	6 000
Nominal torque S1 a)		T_{2N}	[Nm]	43	43	43	43	43	43	43	43	43	30
Acceleration torque S1 b)		T_{2B}	[Nm]	68	68	68	68	68	68	68	68	68	40
Nominal input speed S1 c)		n_{1N}	[rpm]	2 300	3 100	3 100	3 100	3 100	3 100	3 100	3 400	4 000	4 000
Maximum input speed S1		n_{1max}	[rpm]	3 300	3 500	3 500	3 500	3 500	3 500	3 500	3 800	4 500	4 500
Emergency stop torque d)		T_{2not}	[Nm]	200	250	250	250	200	250	250	250	220	177
Efficiency		η	[%]	94%									
Life duration		L_h	[h]	> 20 000									
Weight		M	[kg]	5									
Angular backlash		j_t	[arcmin]	Precision **P 1** ≤ 1 / **P 3** ≤ 3 / **P 5** ≤ 5 / **P 12** ≤12									
Torsionnal rigidity e)		C_{t2}	[Nm/arcmin]	10.62	10.62	10.77	10.77	10.10	10.77	10.62	10.77	10.36	9.31
Noise i)		L_{pA}	[dB(A)]	≤ 68									
Max. permitted housing temperature g)		T	[°C]	90									
Protection class				IP 65									
Direction of rotation				Same way Input / Output									
Max. radial force on output shaft f)		F_{rmax}	[N]	Center of output shaft: 4 200 / End of output shaft: 3 285									
Max. axial force on output shaft f)		F_{amax}	[N]	3 600									
Color				Red RAL 3 003									
Inertia in kg.cm² h)	Ø11	J_1	[kgcm²]	0.46	0.45	0.45	0.39	0.31	0.34	0.31	0.31	0.31	0.31
	Ø14			1.01	1.00	1.00	0.94	0.86	0.89	0.86	0.86	0.86	0.86
	Ø19			1.03	1.02	1.01	0.96	0.88	0.91	0.88	0.88	0.88	0.88
	Ø24			1.84	1.83	1.83	1.77	1.69	1.72	1.69	1.69	1.69	1.69

* Other ratios available. 9, 15, 21, 27, 28, 49 on request.
a) Nominal output torque when operating at n_{1N}.
b) 1000 cycles per hour max.
c) Valid for an ambient temperature of 20°C and T_{2N}. At higher ambient temperatures, please reduce speed.
d) Valid 1000 times the gearbox life.
e) Valid for an input Ø of 19mm in 1-stage and 14mm in 2- and 3-stage.
f) Values for 300 rpm.
g) For other temperatures, please contact us. Nominal output torque when operating at n_{1N}.
h) Depending on the motor output shaft Ø.
i) With **i**=10 and n_{1N}=3000 rpm no load.

Rack

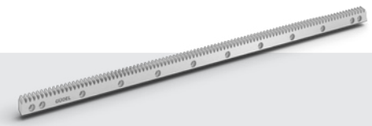

			Pinion 1
Max acceleration force	F_{2B}	[N]	7 480
Max acceleration torque	T_{2B}	[Nm]	159

Above values for rack and pinion take into consideration a number of load cycles: 1×10^6 for the rack; 1×10^7 for the pinion. Both in pulsating operation.

For proper sizing follow Flowchart **Calculate your ideal Drive Train** on pages 106 et seq.

More on the Technical Datasheets **Your ideal Drive Train** on pages 94 et seq.

Input

A	for motor shaft	L ≤ 45	6 ≤ Ød ≤ 19	result in LA
B	for motor shaft	45 < L ≤ 55	19 < Ød ≤ 24	result in LB

Output

Standard

0

		1-stage	2-stage	3-stage
LA	[mm]	106.5	128.5	150.5
LB	[mm]	116	138	160

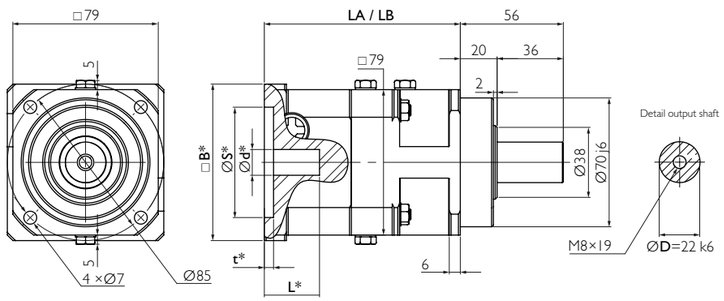

* depending on the motor. See pages 100 et seq.

1

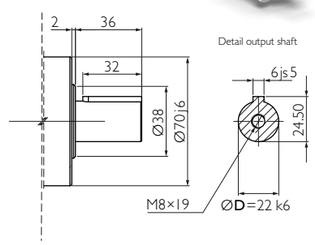

2

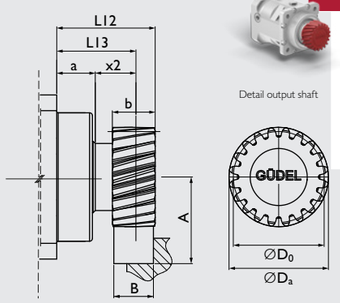

Optional

3

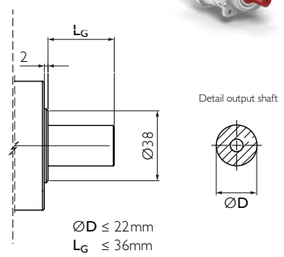

Option 3 on request. Adjustments can reduce capacity.

4

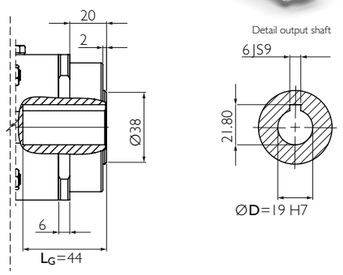

5

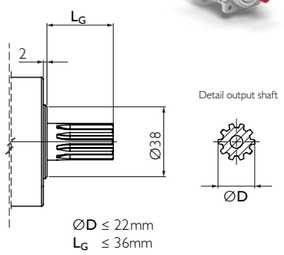

Option 5 on request. Adjustments can reduce capacity.

Example NR 080 A2, 3-stage

Your ideal Drive Train

Function Package with gearbox, rack and pinion from Güdel

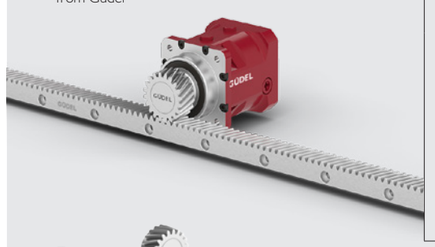

Material	16MnCr5 DIN 1.7131
Teeth	pressure angle α = 20°, helical teeth left, 19°31'42" hardened (58$^{+4}_{0}$ HRC), ground, crowned
Quality	6f24 DIN 3962 / 63 / 67
f_p [mm]	Adjacent pitch error 0.006

Pinion

		m	z	A	b	B	D_a	D_0	L12	L13	x2	a
Pinion 1	[-]	2	20	43.221	25	24	46.44	42.441	52.5	40	20	20

m: Module, z: Number of teeth

Available ratios *		i		3-stage									
				105	125	175	200	250	300	400	500	700	1 000
Nominal torque S5 a)		T_{2N}	[Nm]	68	68	68	68	68	60	68	68	68	54
Acceleration torque S5 b)		T_{2B}	[Nm]	100	100	100	100	100	80	100	100	100	82
Nominal input speed S5 c)		n_{1N}	[rpm]	4 500	4 500	4 500	4 500	4 500	4 500	4 500	4 500	4 500	4 500
Maximum input speed S5		n_{1max}	[rpm]	6 000	6 000	6 000	6 000	6 000	6 000	6 000	6 000	6 000	6 000
Nominal torque S1 a)		T_{2N}	[Nm]	50	50	50	50	50	50	50	50	50	50
Acceleration torque S1 b)		T_{2B}	[Nm]	68	68	68	68	68	68	68	68	68	68
Nominal input speed S1 c)		n_{1N}	[rpm]	4 000	4 000	4 000	4 000	4 000	4 000	4 000	4 000	4 000	4 000
Maximum input speed S1		n_{1max}	[rpm]	4 500	4 500	4 500	4 500	4 500	4 500	4 500	4 500	4 500	4 500
Emergency stop torque d)		T_{2not}	[Nm]	250	250	250	250	250	200	250	250	220	177
Efficiency		η	[%]	92%									
Life duration		L_h	[h]	> 20 000									
Weight		M	[kg]	6									
Angular backlash		j_t	[arcmin]	Precision **P 1** ≤ 1 / **P 3** ≤ 3 / **P 5** ≤ 5 / **P 12** ≤12									
Torsionnal rigidity e)		C_{t2}	[Nm/arcmin]	9.31	10.21	10.21	10.21	10.21	9.60	9.60	10.36	10.36	9.31
Noise i)		L_{pA}	[dB(A)]	≤ 68									
Max. permitted housing temperature g)		T	[°C]	90									
Protection class				IP 65									
Direction of rotation				Same way Input / Output									
Max. radial force on output shaft f)		F_{rmax}	[N]	Center of output shaft: 4 200 / End of output shaft: 3 285									
Max. axial force on output shaft f)		F_{amax}	[N]	3 600									
Color				Red RAL 3003									
Inertia in kg.cm² h)	Ø11	J_1	[kgcm²]	0.34	0.39	0.34	0.31	0.31	0.31	0.31	0.31	0.31	0.31
	Ø14			0.90	0.94	0.89	0.86	0.86	0.86	0.86	0.86	0.86	0.86
	Ø19			0.91	0.95	0.91	0.88	0.88	0.88	0.88	0.88	0.88	0.88
	Ø24			1.73	1.77	1.72	1.69	1.69	1.69	1.69	1.69	1.69	1.69

* Other ratios available. 112, 120, 140, 147, 150, 160, 196, 210, 245, 280, 343, 350, 490 on request.

a) Nominal output torque when operating at n_{1N}.

b) 1000 cycles per hour max.

c) Valid for an ambient temperature of 20°C and T_{2N}. At higher ambient temperatures, please reduce speed.

d) Valid 1000 times the gearbox life.

e) Valid for an input Ø of 19mm in 1-stage and 14mm in 2- and 3-stage.

f) Values for 300 rpm.

g) For other temperatures, please contact us. Nominal output torque when operating at n_{1N}.

h) Depending on the motor output shaft Ø.

i) With i=10 and n_{1N}=3000 rpm no load.

Rack

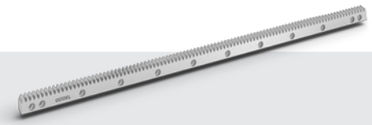

			Pinion 1
Max acceleration force	F_{2B}	[N]	7 480
Max acceleration torque	T_{2B}	[Nm]	159

Above values for rack and pinion take into consideration a number of load cycles: 1×10^6 for the rack; 1×10^7 for the pinion. Both in pulsating operation.

For proper sizing follow Flowchart **Calculate your ideal Drive Train** on pages 106 et seq.

More on the Technical Datasheets **Your ideal Drive Train** on pages 94 et seq.

Input

A	for motor shaft	L ≤ 45	6 ≤ Ød ≤ 19	result in LA
B	for motor shaft	45 < L ≤ 55	19 < Ød ≤ 24	result in LB

Output

Standard

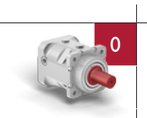

		1-stage	2-stage	3-stage
LA	[mm]	106.5	128.5	150.5
LB	[mm]	116	138	160

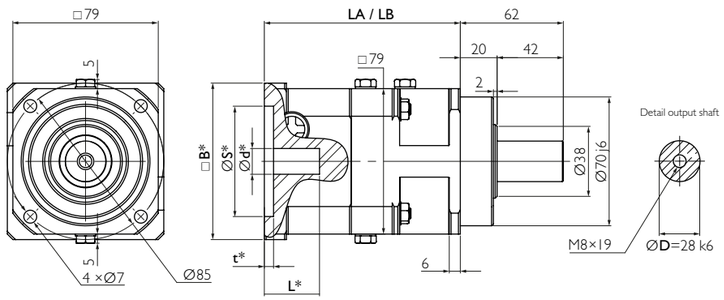

* depending on the motor. See pages 100 et seq.

Example SR 080 B0, 2-stage

Option

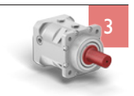

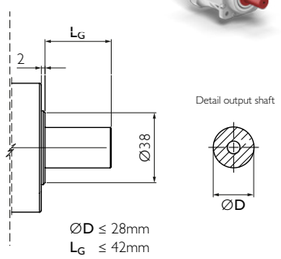

Option 3 on request. Adjustments can reduce capacity.

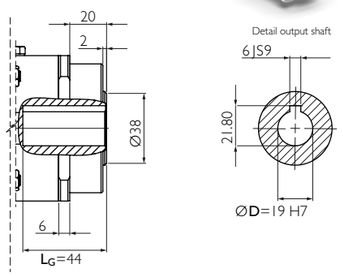

Option 4 on request. Adjustments can reduce capacity.

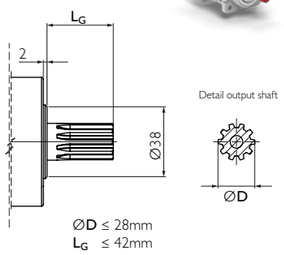

Option 5 on request. Adjustments can reduce capacity.

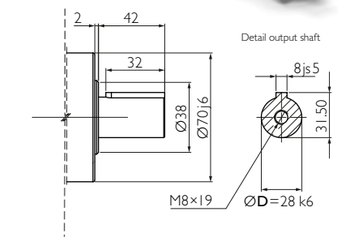

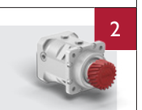

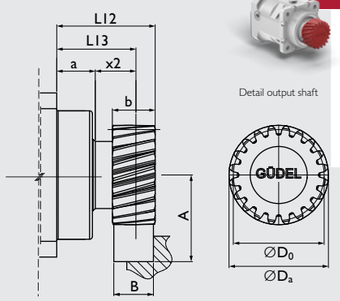

Your ideal Drive Train

Function Package with gearbox, rack and pinion from Güdel

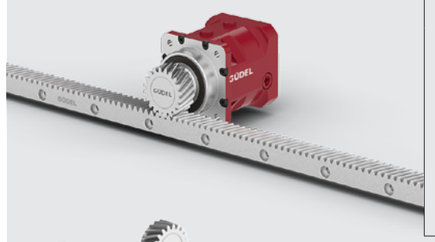

Material	16MnCr5 DIN 1.7131
Teeth	pressure angle α = 20°, helical teeth left, 19°31'42" hardened (58^{+4}_{0} HRC), ground, crowned
Quality	6f24 DIN 3962 / 63 / 67
f_p [mm]	Adjacent pitch error 0.006

Pinion

		m	z	A	b	B	D_a	D_0	L12	L13	x2	a
Pinion 1	[-]	2	20	43.221	25	24	46.44	42.441	52.5	40	20	20

m: Module, z: Number of teeth

Available ratios		i		1-stage	2-stage				
				4	12	16	20	28	40
Nominal torque S5 a)		T_{2N}	[Nm]	95	95	95	95	95	95
Acceleration torque S5 b)		T_{2B}	[Nm]	150	140	140	140	140	140
Nominal input speed S5 c)		n_{1N}	[rpm]	2 600	2 900	3 100	3 100	3 100	3 100
Maximum input speed S5		n_{1max}	[rpm]	5 400	5 400	5 400	5 400	5 400	5 400
Emergency stop torque d)		T_{2not}	[Nm]	250	250	250	250	250	250
Efficiency		η	[%]	96%	93%				
Life duration		L_h	[h]	> 20 000					
Weight		M	[kg]	4	5				
Angular backlash		j_t	[arcmin]	Precision **P 1** ≤ 1 / **P 3** ≤ 3 / **P 5** ≤ 5 / **P 12** ≤12					
Torsionnal rigidity e)		C_{t2}	[Nm/arcmin]	11.7	11.1	11.1	11.3	11.1	11.1
Noise i)		L_{pA}	[dB(A)]	≤ 70					
Max. permitted housing temperature g)		T	[°C]	90					
Protection class				IP 65					
Direction of rotation				Same way Input / Output					
Max. radial force on output shaft f)		F_{rmax}	[N]	Center of output shaft: 4 200 / End of output shaft: 3 285					
Max. axial force on output shaft f)		F_{amax}	[N]	3 600					
Color				Red RAL 3003					
Inertia in kg.cm² h)	Ø11	J_1	[kgcm²]	0.46	0.46	0.45	0.45	0.34	0.31
	Ø14			1.02	1.01	1.00	1.00	0.89	0.86
	Ø19			1.03	1.03	1.02	1.01	0.91	0.88
	Ø24			1.85	1.84	1.83	1.83	1.72	1.69

a) Nominal output torque when operating at n_{1N}.
b) 1000 cycles per hour max.
c) Valid for an ambient temperature of 20°C and T_{2N}. At higher ambient temperatures, please reduce speed.
d) Valid 1000 times the gearbox life.
e) Valid for an input Ø of 19mm in 1-stage and 14mm in 2- and 3-stage.
f) Values for 300 rpm.
g) For other temperatures, please contact us. Nominal output torque when operating at n_{1N}.
h) Depending on the motor output shaft Ø.
i) With n_{1N}=2500 rpm no load.

Rack

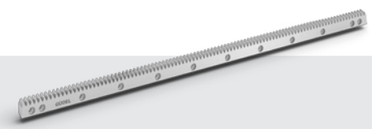

			Pinion 1
Max acceleration force	F_{2B}	[N]	7 480
Max acceleration torque	T_{2B}	[Nm]	159

Above values for rack and pinion take into consideration a number of load cycles: 1×10^6 for the rack; 1×10^7 for the pinion. Both in pulsating operation.

For proper sizing follow Flowchart **Calculate your ideal Drive Train** on pages 106 et seq.

More on the Technical Datasheets **Your ideal Drive Train** on pages 94 et seq.

Input

A	for motor shaft	L ≤ 45	6 ≤ Ød ≤ 19	result in LA
B	for motor shaft	45 < L ≤ 55	19 < Ød ≤ 24	result in LB

Output

Standard

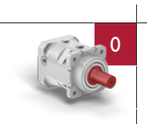

		1-stage	2-stage	3-stage
LA	[mm]	106.5	128.5	150.5
LB	[mm]	116	138	160

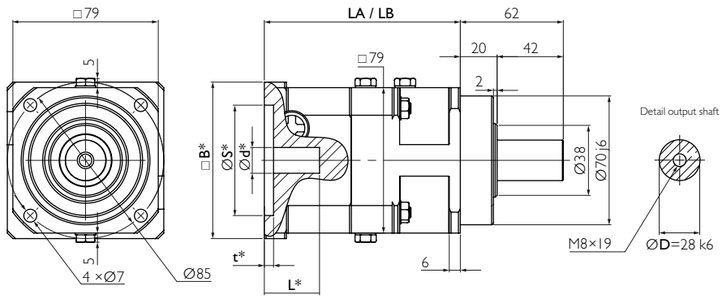

* depending on the motor. See pages 100 et seq.

Example SR 080 A1, 3-stage

Option

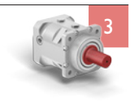

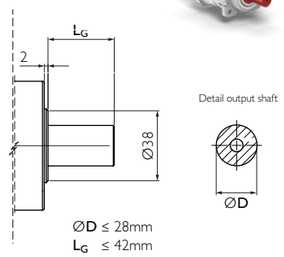

Option 3 on request. Adjustments can reduce capacity.

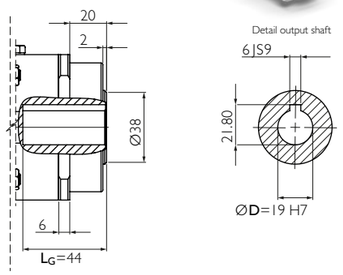

Option 4 on request. Adjustments can reduce capacity.

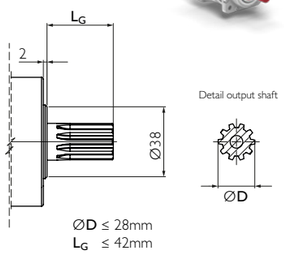

Option 5 on request. Adjustments can reduce capacity.

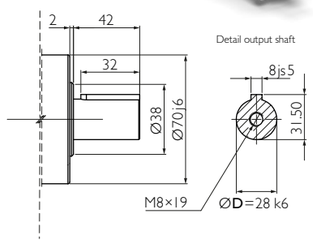

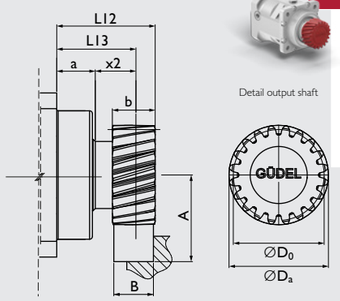

Your ideal Drive Train

Function Package with gearbox, rack and pinion from Güdel

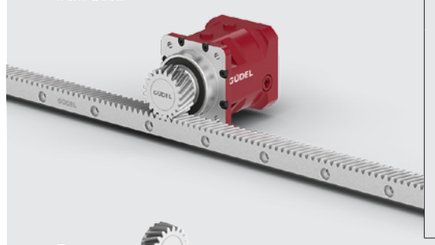

Material 16MnCr5 DIN 1.7131
Teeth pressure angle α = 20°, helical teeth left, 19°31'42"
hardened (58$^{+4}_{0}$ HRC), ground, crowned
Quality 6f24 DIN 3962 / 63 / 67
f_p [mm] Adjacent pitch error 0.006

Pinion

		m	z	A	b	B	D_a	D_0	L12	L13	x2	a
Pinion 1	[-]	2	20	43.221	25	24	46.44	42.441	52.5	40	20	20

m: Module, z: Number of teeth

GÜDEL

Available ratios *		i		3-stage									
				60	80	100	112	120	140	160	200	280	400
Nominal torque S5 a)		T_{2N}	[Nm]	95	95	95	95	95	95	95	95	95	95
Acceleration torque S5 b)		T_{2B}	[Nm]	140	140	140	140	140	140	140	140	140	140
Nominal input speed S5 c)		n_{1N}	[rpm]	4 000	4 000	4 000	4 000	4 000	4 000	4 000	4 000	4 000	4 000
Maximum input speed S5		n_{1max}	[rpm]	5 400	5 400	5 400	5 400	5 400	5 400	5 400	5 400	5 400	5 400
Emergency stop torque d)		T_{2not}	[Nm]	250	250	250	250	250	250	250	250	250	250
Efficiency		η	[%]	90%									
Life duration		L_h	[h]	> 20 000									
Weight		M	[kg]	6									
Angular backlash		j_t	[arcmin]	Precision **P 1** ≤ 1 / **P 3** ≤ 3 / **P 5** ≤ 5 / **P 12** ≤12									
Torsionnal rigidity e)		C_{t2}	[Nm/arcmin]	10.7	10.7	9.8	10.6	10.6	10.7	10.6	10.7	10.6	10.1
Noise i)		L_{pA}	[dB(A)]	≤ 70									
Max. permitted housing temperature g)		T	[°C]	90									
Protection class				IP 65									
Direction of rotation				Same way Input / Output									
Max. radial force on output shaft f)		F_{rmax}	[N]	Center of output shaft: 4 200 / End of output shaft: 3 285									
Max. axial force on output shaft f)		F_{amax}	[N]	3 600									
Color				Red RAL 3003									
Inertia in kg.cm² h)	Ø11	J_1	[kgcm²]	0.46	0.45	0.31	0.34	0.31	0.34	0.31	0.31	0.31	0.31
	Ø14			1.01	1.00	0.86	0.89	0.86	0.89	0.86	0.86	0.86	0.86
	Ø19			1.03	1.02	0.88	0.91	0.88	0.91	0.88	0.88	0.88	0.88
	Ø24			1.84	1.83	1.69	1.72	1.69	1.72	1.69	1.69	1.69	1.69

* Other ratios available. 36, 64, 84, 180, 196, 300, 360, 500, 600, 700, 1 000 on request
a) Nominal output torque when operating at n_{1N}.
b) 1000 cycles per hour max.
c) Valid for an ambient temperature of 20°C and T_{2N}. At higher ambient temperatures, please reduce speed.
d) Valid 1000 times the gearbox life.
e) Valid for an input Ø of 19mm in 1-stage and 14mm in 2- and 3-stage.
f) Values for 300 rpm.
g) For other temperatures, please contact us. Nominal output torque when operating at n_{1N}
h) Depending on the motor output shaft Ø.
i) With n_{1N}=2500 rpm no load.

Rack

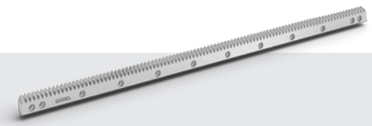

			Pinion 1
Max acceleration force	F_{2B}	[N]	7 480
Max acceleration torque	T_{2B}	[Nm]	159

Above values for rack and pinion take into consideration a number of load cycles: 1×10^6 for the rack; 1×10^7 for the pinion. Both in pulsating operation.

For proper sizing follow Flowchart **Calculate your ideal Drive Train** on pages 106 et seq.

More on the Technical Datasheets **Your ideal Drive Train** on pages 94 et seq.

Input

A	for motor shaft	L ≤ 45	6 ≤ Ød ≤ 19	result in LA
B	for motor shaft	45 < L ≤ 55	19 < Ød ≤ 24	result in LB

Output

Standard

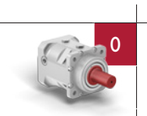

		1-stage	2-stage	3-stage
LA	[mm]	106.5	128.5	150.5
LB	[mm]	116	138	160

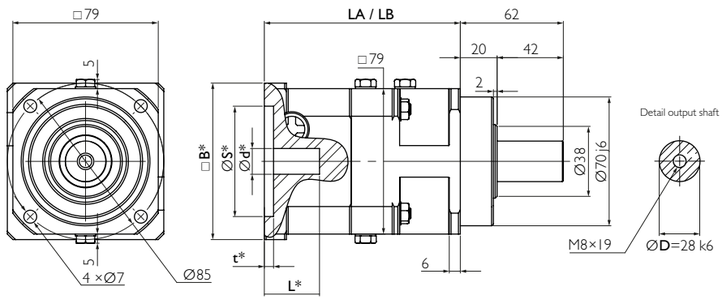

* depending on the motor. See pages 100 et seq.

Example PR 080 B0, 1-stage

Option

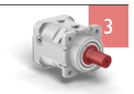

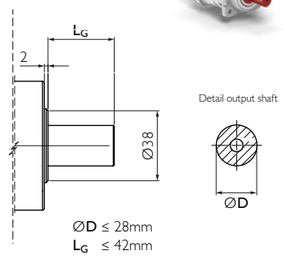

Option 3 on request. Adjustments can reduce capacity.

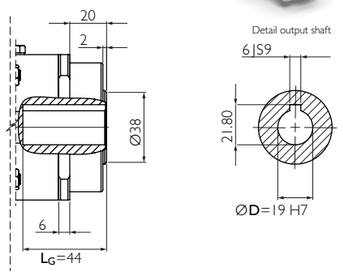

Option 4 on request. Adjustments can reduce capacity.

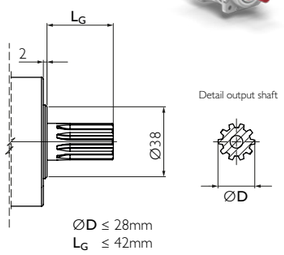

Option 5 on request. Adjustments can reduce capacity.

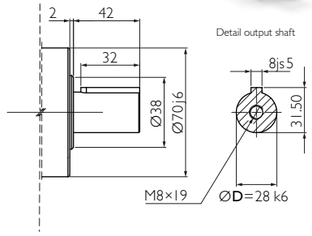

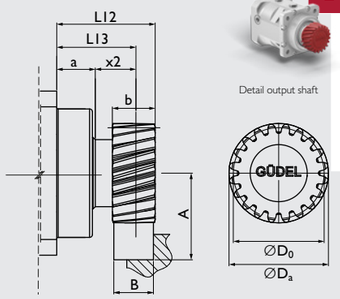

Option 2 on request. Adjustments can reduce capacity.

Material	16MnCr5 DIN 1.7131
Teeth	pressure angle α = 20°, helical teeth left, 19°31'42"
	hardened (58^{+4}_{0} HRC), ground, crowned
Quality	6f24 DIN 3962 / 63 / 67
f_p [mm]	Adjacent pitch error 0.006

Your ideal Drive Train

Function Package with gearbox, rack and pinion from Güdel

Pinion

Pinion for PR on request

Available ratios		i		1-stage	2-stage				
				3	9	12	15	21	30
Nominal torque S5 a)		T_{2N}	[Nm]	120	120	120	120	120	120
Acceleration torque S5 b)		T_{2B}	[Nm]	160	160	160	160	160	160
Nominal input speed S5 c)		n_{1N}	[rpm]	2 300	2 300	2 600	2 800	2 800	2 800
Maximum input speed S5		n_{1max}	[rpm]	4 000	4 000	4 800	4 800	4 800	4 800
Emergency stop torque d)		T_{2not}	[Nm]	210	200	200	200	200	200
Efficiency		η	[%]	94%	91%				
Life duration		L_h	[h]	> 20 000					
Weight		M	[kg]	4	5				
Angular backlash		j_t	[arcmin]	Precision **P 1** ≤ 1 / **P 3** ≤ 3 / **P 5** ≤ 5 / **P 12** ≤12					
Torsionnal rigidity e)		C_{t2}	[Nm/arcmin]	12.2	11.6	12.2	11.6	11.6	11.6
Noise i)		L_{pA}	[dB(A)]	≤ 70					
Max. permitted housing temperature g)		T	[°C]	90					
Protection class				IP 65					
Direction of rotation				Same way Input / Output					
Max. radial force on output shaft f)		F_{rmax}	[N]	Center of output shaft: 4 200 / End of output shaft: 3 285					
Max. axial force on output shaft f)		F_{amax}	[N]	3 600					
Color				Red RAL 3003					
Inertia in kg.cm² h)	Ø11	J_1	[kgcm²]	0.62	0.62	0.46	0.40	0.34	0.31
	Ø14			1.18	1.17	1.01	0.95	0.90	0.86
	Ø19			1.19	1.19	1.03	0.96	0.91	0.88
	Ø24			2.01	2.00	1.84	1.78	1.73	1.69

a) Nominal output torque when operating at n_{1N}.
b) 1000 cycles per hour max.
c) Valid for an ambient temperature of 20°C and T_{2N}. At higher ambient temperatures, please reduce speed.
d) Valid 1000 times the gearbox life.
e) Valid for an input Ø of 19mm in 1-stage and 14mm in 2- and 3-stage.
f) Values for 300 rpm.
g) For other temperatures, please contact us. Nominal output torque when operating at n_{1N}.
h) Depending on the motor output shaft Ø.
i) With n_{1N}=2500 rpm no load.

Rack

Rack for PR on request

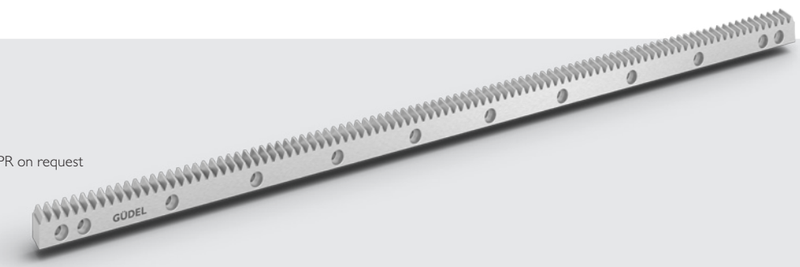

For proper sizing follow Flowchart **Calculate your ideal Drive Train** on pages 106 et seq.

More on the Technical Datasheets **Your ideal Drive Train** on pages 94 et seq.

Input

A	for motor shaft	L ≤ 45	6 ≤ Ød ≤ 19	result in **LA**
B	for motor shaft	45 < L ≤ 55	19 < Ød ≤ 24	result in **LB**

Output

Standard

		1-stage	2-stage	3-stage
LA	[mm]	106.5	128.5	150.5
LB	[mm]	116	138	160

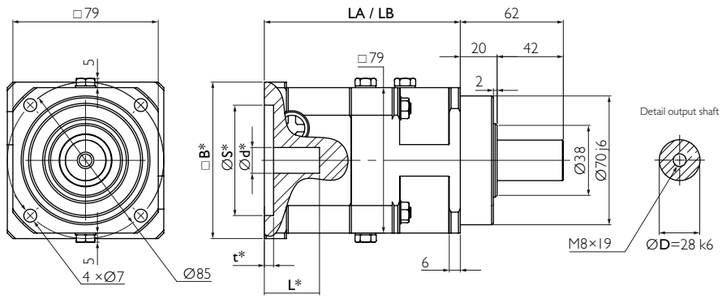

* depending on the motor. See pages 100 et seq.

Example PR 080 A0, 3-stage

Option

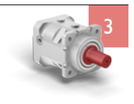

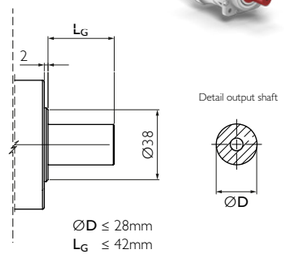

Option 3 on request. Adjustments can reduce capacity.

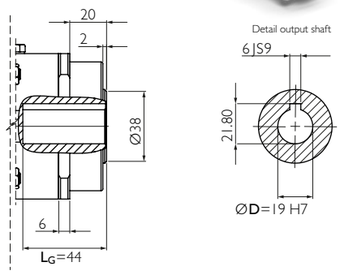

Option 4 on request. Adjustments can reduce capacity.

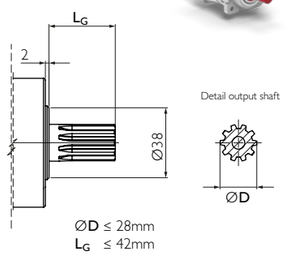

Option 5 on request. Adjustments can reduce capacity.

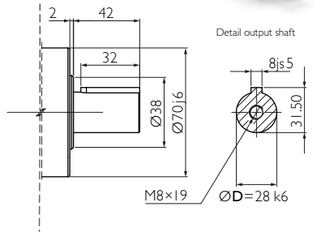

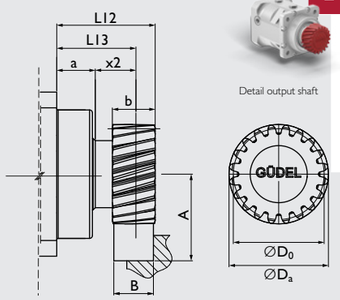

Option 2 on request. Adjustments can reduce capacity.

Material	16MnCr5 DIN 1.7131
Teeth	pressure angle α = 20°, helical teeth left, 19°31'42"
	hardened (58$^{+4}_{0}$ HRC), ground, crowned
Quality	6f24 DIN 3962 / 63 / 67
f_p [mm]	Adjacent pitch error 0.006

Your ideal Drive Train

Function Package with gearbox, rack and pinion from Güdel

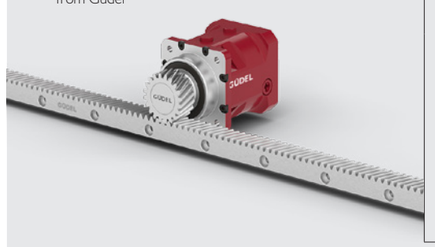

Pinion

Pinion for PR on request

Available ratios		i		3-stage 36	45	60	75	90	105	120	150	210	300
Nominal torque S5 a)		T_{2N}	[Nm]	120	120	120	120	120	120	120	120	120	120
Acceleration torque S5 b)		T_{2B}	[Nm]	160	160	160	160	160	160	160	160	160	160
Nominal input speed S5 c)		n_{1N}	[rpm]	3 000	3 600	3 600	3 600	3 600	3 600	3 600	3 600	3 600	3 600
Maximum input speed S5		n_{1max}	[rpm]	4 800	4 800	4 800	4 800	4 800	4 800	4 800	4 800	4 800	4 800
Emergency stop torque d)		T_{2not}	[Nm]	200	200	200	200	200	200	200	200	200	200
Efficiency		η	[%]	88%									
Life duration		L_h	[h]	> 20 000									
Weight		M	[kg]	6									
Angular backlash		j_t	[arcmin]	Precision **P 1** ≤ 1 / **P 3** ≤ 3 / **P 5** ≤ 5 / **P 12** ≤12									
Torsionnal rigidity e)		C_{t2}	[Nm/arcmin]	11.6	11.6	11.8	11.8	11.1	11.8	11.6	11.8	11.9	11.1
Noise i)		L_{pA}	[dB(A)]	≤ 71									
Max. permitted housing temperature g)		T	[°C]	90									
Protection class				IP 65									
Direction of rotation				Same way Input / Output									
Max. radial force on output shaft f)		F_{rmax}	[N]	Center of output shaft: 4 200 / End of output shaft: 3 285									
Max. axial force on output shaft f)		F_{amax}	[N]	3 600									
Color				Red RAL 3003									
Inertia in kg.cm² h)	Ø11	J_1	[kgcm²]	0.46	0.40	0.46	0.40	0.31	0.34	0.31	0.31	0.31	0.31
	Ø14			1.01	0.95	1.01	0.95	0.86	0.90	0.86	0.86	0.86	0.86
	Ø19			1.03	0.96	1.03	0.96	0.88	0.91	0.88	0.88	0.88	0.88
	Ø24			1.84	1.78	1.84	1.78	1.69	1.73	1.69	1.69	1.69	1.69

* Other ratios available. 27, 48, 63, 84, 147 on request
a) Nominal output torque when operating at n_{1N}.
b) 1000 cycles per hour max.
c) Valid for an ambient temperature of 20°C and T_{2N}. At higher ambient temperatures, please reduce speed.
d) Valid 1000 times the gearbox life.
e) Valid for an input Ø of 19mm in 1-stage and 14mm in 2- and 3-stage.
f) Values for 300 rpm.
g) For other temperatures, please contact us. Nominal output torque when operating at n_{1N}.
h) Depending on the motor output shaft Ø.
i) With n_{1N}=2500 rpm no load.

Rack

Rack for PR on request

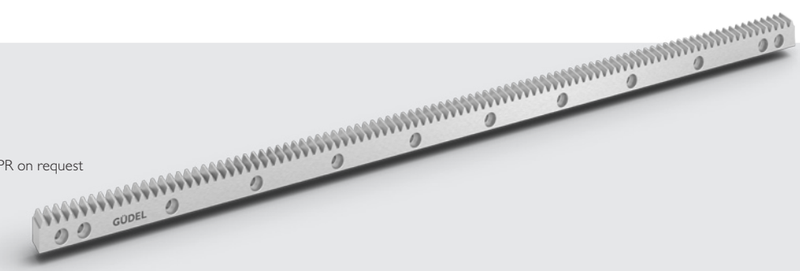

For proper sizing follow Flowchart **Calculate your ideal Drive Train** on pages 106 et seq.

More on the Technical Datasheets **Your ideal Drive Train** on pages 94 et seq.

Input

A	for motor shaft	L ≤ 50	9 ≤ Ød ≤ 24	result in LA
B	for motor shaft	51 < L ≤ 64	24 < Ød ≤ 35	result in LB

Output

Standard

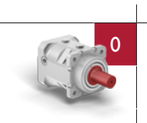

		1-stage	2-stage	3-stage
LA	[mm]	126	164	202
LB	[mm]	140	178	216

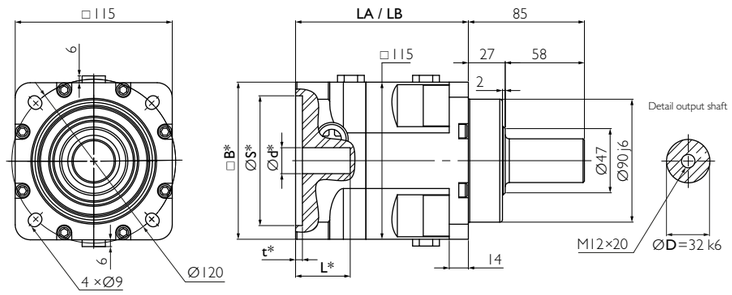

* depending on the motor. See pages 100 et seq.

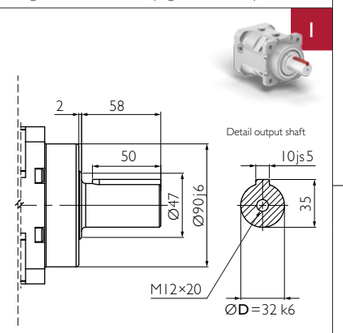

Option

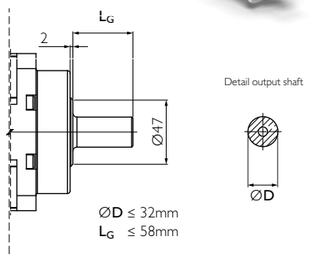

Option 3 on request. Adjustments can reduce capacity.

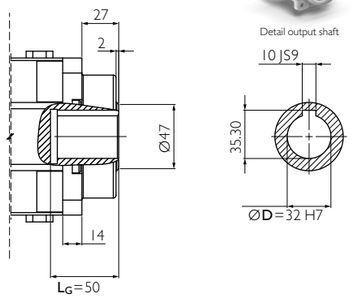

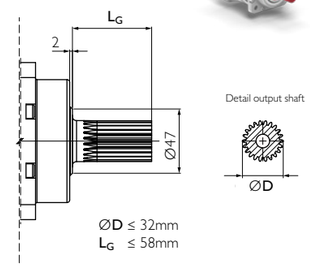

Option 5 on request. Adjustments can reduce capacity.

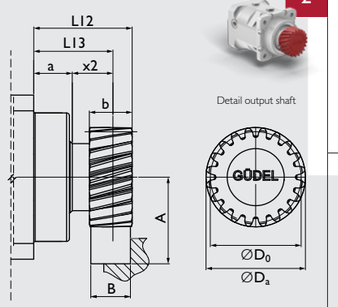

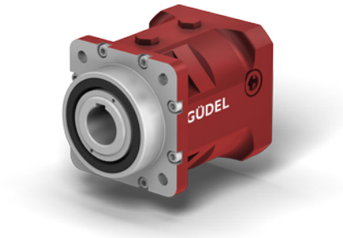

Example NR 100 A4, 1-stage

Your ideal Drive Train

Function Package with gearbox, rack and pinion from Güdel

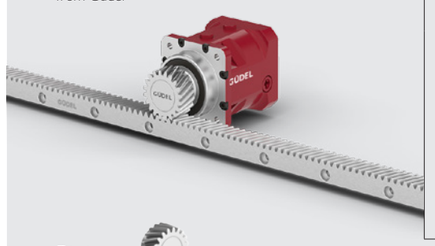

Material	16MnCr5 DIN 1.7131
Teeth	pressure angle α = 20°, helical teeth left, 19°31'42" hardened (58+4 0 HRC), ground, crowned
Quality	6f24 DIN 3962 / 63 / 67
f_p [mm]	Adjacent pitch error 0.006

Pinion

		m	z	A	b	B	D_a	D_0	L12	L13	x2	a
Pinion 1	[-]	2	25	48.526	25	24	57.05	53.052	63.3	49.8	23.8	27
Pinion 2	[-]	3	20	57.831	30	29	69.66	63.662	69	55.5	27	27

m: Module, z: Number of teeth

GÜDEL

Available ratios		i		1-stage 3	4	5	7	10
Nominal torque S5 a)		T_{2N}	[Nm]	174	226	235	217	130
Acceleration torque S5 b)		T_{2B}	[Nm]	278	304	304	287	230
Nominal input speed S5 c)		n_{1N}	[rpm]	2 500	2 500	2 500	2 800	2 800
Maximum input speed S5		n_{1max}	[rpm]	4 000	4 500	4 500	4 500	4 500
Nominal torque S1 a)		T_{2N}	[Nm]	70	122	122	122	87
Acceleration torque S1 b)		T_{2B}	[Nm]	165	217	217	217	165
Nominal input speed S1 c)		n_{1N}	[rpm]	1 700	2 200	2 200	2 500	2 500
Maximum input speed S1		n_{1max}	[rpm]	2 500	2 500	2 500	2 800	2 800
Emergency stop torque d)		T_{2not}	[Nm]	435	565	587	543	326
Efficiency		η	[%]	97%				
Life duration		L_h	[h]	> 20 000				
Weight		M	[kg]	8				
Angular backlash		j_t	[arcmin]	Precision P 1 ≤ 1 / P 3 ≤ 3 / P 5 ≤ 5 / P 12 ≤12				
Torsionnal rigidity e)		C_{t2}	[Nm/arcmin]	32.0	39.0	40.7	41.6	34.3
Noise i)		L_{pA}	[dB(A)]	≤ 69				
Max. permitted housing temperature g)		T	[°C]	90				
Protection class				IP 65				
Direction of rotation				Same way Input / Output				
Max. radial force on output shaft f)		$F_{r\,max}$	[N]	Center of output shaft: 6 600 / End of output shaft: 4 300				
Max. axial force on output shaft f)		$F_{a\,max}$	[N]	6 000				
Color				Red RAL 3 003				
Inertia in kg.cm² h)	Ø14	J_1	[kgcm²]	4.08	2.83	2.32	1.88	1.62
	Ø19			4.08	2.83	2.32	1.88	1.62
	Ø24			4.09	2.84	2.33	1.89	1.63
	Ø32			7.29	6.04	5.53	5.09	4.83
	Ø35			9.92	8.67	8.16	7.72	7.46

a) Nominal output torque when operating at n_{1N}.
b) 1000 cycles per hour max.
c) Valid for an ambient temperature of 20°C and T_{2N}. At higher ambient temperatures, please reduce speed.
d) Valid 1000 times the gearbox life.
e) Valid for an input Ø of 24mm in 1-stage and 19mm in 2- and 3-stage.
f) Values for 300 rpm.
g) For other temperatures, please contact us. Nominal output torque when operating at n_{1N}.
h) Depending on the motor output shaft Ø.
i) With i=10 and n_{1N}=3000 rpm no load.

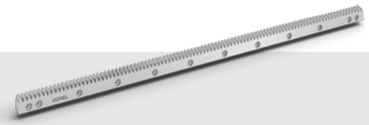

Rack

			Pinion 1	Pinion 2
Max acceleration force	F_{2B}	[N]	7 530	13 700
Max acceleration torque	T_{2B}	[Nm]	200	436

Above values for rack and pinion take into consideration a number of load cycles: 1×10^6 for the rack; 1×10^7 for the pinion. Both in pulsating operation.

For proper sizing follow Flowchart **Calculate your ideal Drive Train** on pages 106 et seq.

More on the Technical Datasheets **Your ideal Drive Train** on pages 94 et seq.

T_{2B} ≤ 304 Nm

Input

A	for motor shaft	L ≤ 50	9 ≤ Ød ≤ 24	result in LA
B	for motor shaft	51 < L ≤ 64	24 < Ød ≤ 35	result in LB

Output

Standard

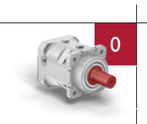

		1-stage	2-stage	3-stage
LA	[mm]	126	164	202
LB	[mm]	140	178	216

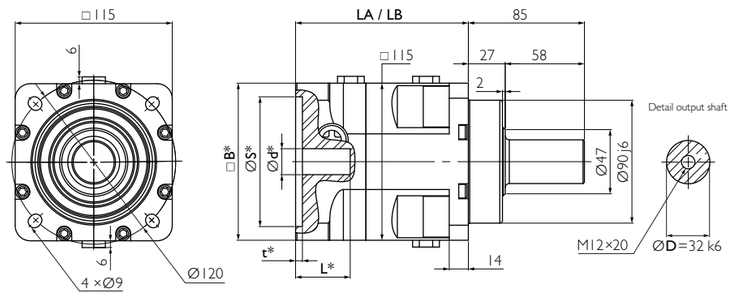

* depending on the motor. See pages 100 et seq.

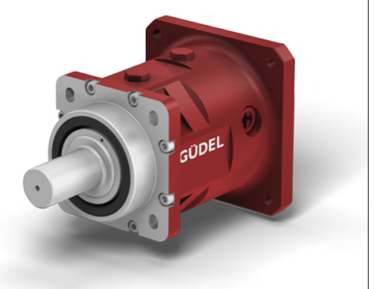

Example NR 080 B0

Option

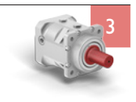

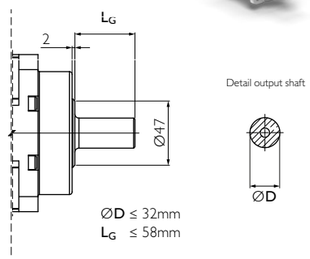

Option 3 on request. Adjustments can reduce capacity.

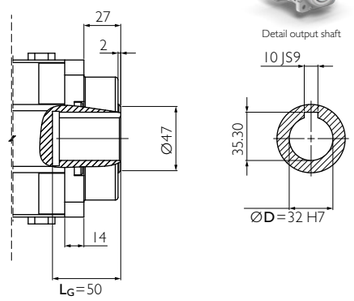

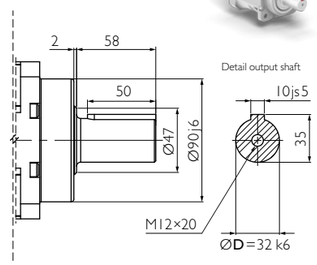

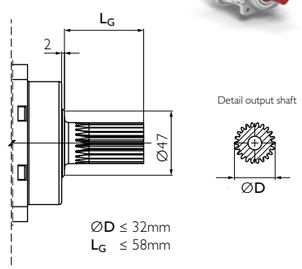

Option 5 on request. Adjustments can reduce capacity.

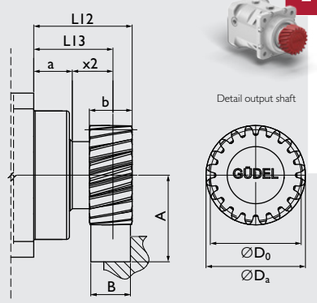

Your ideal Drive Train

Function Package with gearbox, rack and pinion from Güdel

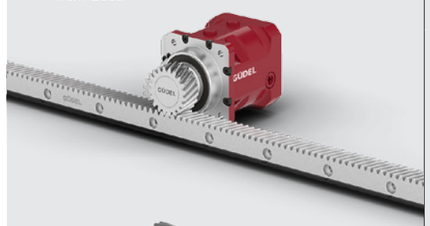

Material	16MnCr5 DIN 1.7131
Teeth	pressure angle α = 20°, helical teeth left, 19°31'42" hardened (58$^{+4}_{0}$ HRC), ground, crowned
Quality	6f24 DIN 3962 / 63 / 67
f_p [mm]	Adjacent pitch error 0.006

Pinion

		m	z	A	b	B	D_a	D_0	L12	L13	x2	a
Pinion 1	[-]	2	25	48.526	25	24	57.05	53.052	63.3	49.8	23.8	27
Pinion 2	[-]	3	20	57.831	30	29	69.66	63.662	69	55.5	27	27

m: Module, z: Number of teeth

GÜDEL

Available ratios *		i		2-stage									
				12	16	20	25	30	35	40	50	70	100
Nominal torque S5 a)		T_{2N}	[Nm]	174	226	235	235	174	235	226	235	217	130
Acceleration torque S5 b)		T_{2B}	[Nm]	278	278	304	304	278	304	304	278	287	230
Nominal input speed S5 c)		n_{1N}	[rpm]	2 900	3 100	3 100	3 100	3 100	3 100	3 100	3 500	4 200	4 200
Maximum input speed S5		n_{1max}	[rpm]	4 500	4 500	4 500	4 500	4 500	4 500	4 500	4 500	4 500	4 500
Nominal torque S1 a)		T_{2N}	[Nm]	122	122	122	130	130	130	130	130	130	87
Acceleration torque S1 b)		T_{2B}	[Nm]	217	217	217	217	217	217	217	217	217	165
Nominal input speed S1 c)		n_{1N}	[rpm]	2 000	2 200	2 800	2 800	2 800	2 800	2 800	3 100	3 800	3 800
Maximum input speed S1		n_{1max}	[rpm]	2 900	3 100	3 100	3 100	3 100	3 100	3 100	3 500	4 200	4 200
Emergency stop torque d)		T_{2not}	[Nm]	435	565	587	587	435	587	565	587	543	326
Efficiency		η	[%]	94%									
Life duration		L_h	[h]	> 20 000									
Weight		M	[kg]	10									
Angular backlash		j_t	[arcmin]	Precision **P 1** ≤ 1 / **P 3** ≤ 3 / **P 5** ≤ 5 / **P 12** ≤12									
Torsionnal rigidity e)		C_{t2}	[Nm/arcmin]	30.6	37.0	36.7	38.7	30.6	38.7	37.0	38.7	39.6	32.6
Noise i)		L_{pA}	[dB(A)]	≤ 69									
Max. permitted housing temperature g)		T	[°C]	90									
Protection class				IP 65									
Direction of rotation				Same way Input / Output									
Max. radial force on output shaft f)		$F_{r\,max}$	[N]	Center of output shaft: 6 600 / End of output shaft: 4 300									
Max. axial force on output shaft f)		$F_{a\,max}$	[N]	6 000									
Color				Red RAL 3003									
Inertia in kg.cm² h)	Ø14	J_1	[kgcm²]	2.76	2.69	2.23	2.21	1.61	1.82	1.60	1.59	1.59	1.59
	Ø19			2.76	2.69	2.23	2.21	1.61	1.82	1.60	1.59	1.59	1.59
	Ø24			2.77	2.70	2.24	2.22	1.62	1.83	1.61	1.60	1.60	1.60
	Ø32			5.97	5.97	5.44	5.42	4.82	5.03	4.81	4.80	4.80	4.80
	Ø35			8.60	8.53	8.07	8.05	7.45	7.66	7.44	7.43	7.43	7.43

* Other ratios available. 9, 15, 21, 27, 28, 49 on request.
a) Nominal output torque when operating at n_{1N}.
b) 1000 cycles per hour max.
c) Valid for an ambient temperature of 20°C and T_{2N}. At higher ambient temperatures, please reduce speed.
d) Valid 1000 times the gearbox life.
e) Valid for an input Ø of 24mm in 1-stage and 19mm in 2- and 3-stage.
f) Values for 300 rpm.
g) For other temperatures, please contact us. Nominal output torque when operating at n_{1N}.
h) Depending on the motor output shaft Ø.
i) With i=10 and n_{1N}=3000 rpm no load.

T_{2B} ≤ 304 Nm

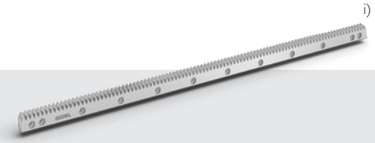

Rack

			Pinion 1	Pinion 2
Max acceleration force	F_{2B}	[N]	7 530	13 700
Max acceleration torque	T_{2B}	[Nm]	200	436

Above values for rack and pinion take into consideration a number of load cycles: 1×10^6 for the rack; 1×10^7 for the pinion. Both in pulsating operation.

For proper sizing follow Flowchart **Calculate your ideal Drive Train** on pages 106 et seq.

More on the Technical Datasheets **Your ideal Drive Train** on pages 94 et seq.

Input

A	for motor shaft	L ≤ 50	9 ≤ Ød ≤ 24	result in LA
B	for motor shaft	51 < L ≤ 64	24 < Ød ≤ 35	result in LB

Output

Standard

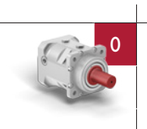

		1-stage	2-stage	3-stage
LA	[mm]	126	164	202
LB	[mm]	140	178	216

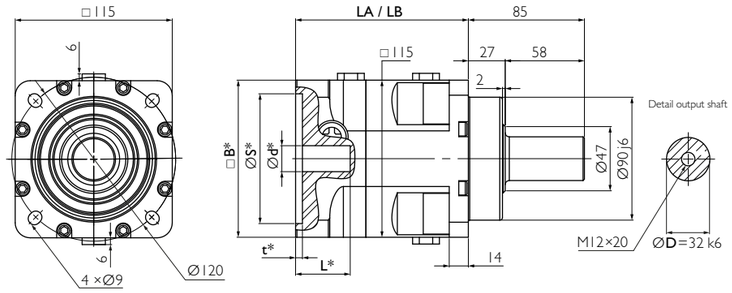

* depending on the motor. See pages 100 et seq.

Option

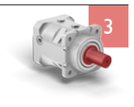

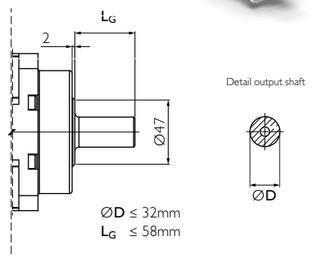

Option 3 on request. Adjustments can reduce capacity.

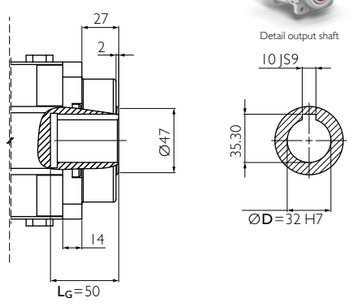

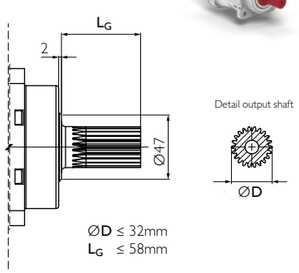

Option 5 on request. Adjustments can reduce capacity.

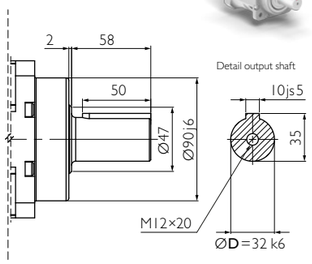

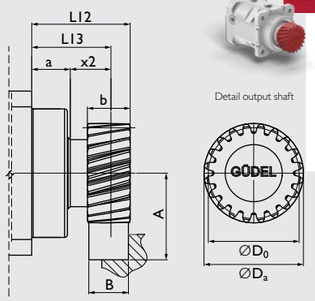

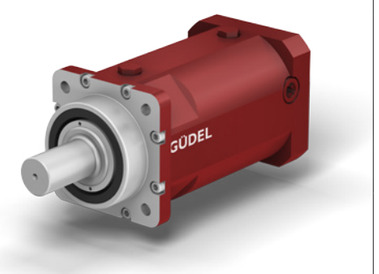

Example NR 100 A0, 3-stage

Your ideal Drive Train

Function Package with gearbox, rack and pinion from Güdel

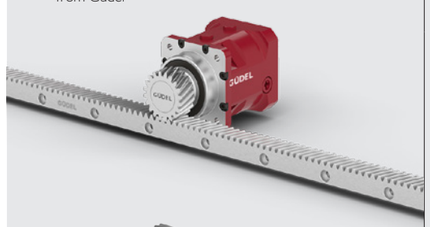

Material	16MnCr5 DIN 1.7131
Teeth	pressure angle α = 20°, helical teeth left, 19°31'42" hardened (58+4 HRC), ground, crowned
Quality	6f24 DIN 3962 / 63 / 67
f_p [mm]	Adjacent pitch error 0.006

Pinion

		m	z	A	b	B	D_a	D_0	L12	L13	x2	a
Pinion 1	[-]	2	25	48.526	25	24	57.05	53.052	63.3	49.8	23.8	27
Pinion 2	[-]	3	20	57.831	30	29	69.66	63.662	69	55.5	27	27

m: Module, z: Number of teeth

Available ratios *			3-stage									
	i		105	125	175	200	250	300	400	500	700	1 000
Nominal torque S5 a)	T_{2N}	[Nm]	235	245	245	245	245	200	250	245	250	140
Acceleration torque S5 b)	T_{2B}	[Nm]	304	300	300	300	300	255	305	304	290	180
Nominal input speed S5 c)	n_{1N}	[rpm]	4 200	4 200	4 200	4 200	4 200	4 200	4 200	4 200	4 200	4 200
Maximum input speed S5	n_{1max}	[rpm]	5 000	5 000	5 000	5 000	5 000	5 000	5 000	5 000	5 000	5 000
Nominal torque S1 a)	T_{2N}	[Nm]	122	122	122	122	122	70	122	122	122	87
Acceleration torque S1 b)	T_{2B}	[Nm]	217	217	217	217	217	165	217	217	217	140
Nominal input speed S1 c)	n_{1N}	[rpm]	3 800	3 800	3 800	3 800	3 800	3 800	3 800	3 800	3 800	3 800
Maximum input speed S1	n_{1max}	[rpm]	4 200	4 200	4 200	4 200	4 200	4 200	4 200	4 200	4 200	4 200
Emergency stop torque d)	T_{2not}	[Nm]	600	600	600	600	600	500	600	600	550	350
Efficiency	η	[%]	91%									
Life duration	L_h	[h]	> 20 000									
Weight	M	[kg]	12									
Angular backlash	j_t	[arcmin]	Precision **P 1** ≤ 1 / **P 3** ≤ 3 / **P 5** ≤ 5 / **P 12** ≤12									
Torsionnal rigidity e)	C_{t2}	[Nm/arcmin]	36.7	36.7	36.7	36.7	36.7	35.2	35.2	36.7	36.7	30.8
Noise i)	L_{pA}	[dB(A)]	≤ 69									
Max. permitted housing temperature g)	T	[°C]	90									
Protection class			IP 65									
Direction of rotation			Same way Input / Output									
Max. radial force on output shaft f)	$F_{r\,max}$	[N]	Center of output shaft: 6 600 / End of output shaft: 4 300									
Max. axial force on output shaft f)	$F_{a\,max}$	[N]	6 000									
Color			Red RAL 3003									
Inertia in kg.cm² h) Ø14	J_1	[kgcm²]	1.82	2.21	1.82	1.59	1.59	1.59	1.59	1.59	1.59	1.59
Inertia in kg.cm² h) Ø19	J_1	[kgcm²]	1.82	2.21	1.82	1.59	1.59	1.59	1.59	1.59	1.59	1.59
Inertia in kg.cm² h) Ø24	J_1	[kgcm²]	1.83	2.22	1.83	1.60	1.60	1.60	1.60	1.60	1.60	1.60
Inertia in kg.cm² h) Ø32	J_1	[kgcm²]	5.03	5.42	5.03	4.80	4.80	4.80	4.80	4.80	4.80	4.80
Inertia in kg.cm² h) Ø35	J_1	[kgcm²]	7.66	8.05	7.66	7.43	7.43	7.43	7.43	7.43	7.43	7.43

* Other ratios available. 112, 120, 140, 147, 150, 160, 196, 210, 245, 280, 343, 350, 490 on request.

a) Nominal output torque when operating at n_{1N}.

b) 1000 cycles per hour max.

c) Valid for an ambient temperature of 20°C and T_{2N}. At higher ambient temperatures, please reduce speed.

d) Valid 1000 times the gearbox life.

e) Valid for an input Ø of 24mm in 1-stage and 19mm in 2- and 3-stage.

f) Values for 300 rpm.

g) For other temperatures, please contact us. Nominal output torque when operating at n_{1N}.

h) Depending on the motor output shaft Ø.

i) With i=10 and n_{1N}=3000 rpm no load.

Rack

			Pinion 1	Pinion 2
Max acceleration force	F_{2B}	[N]	7 530	13 700
Max acceleration torque	T_{2B}	[Nm]	200	436

Above values for rack and pinion take into consideration a number of load cycles: 1×10^6 for the rack; 1×10^7 for the pinion. Both in pulsating operation.

For proper sizing follow Flowchart **Calculate your ideal Drive Train** on pages 106 et seq.

More on the Technical Datasheets **Your ideal Drive Train** on pages 94 et seq.

Input

A	for motor shaft	L ≤ 50	9 ≤ Ød ≤ 24	result in LA
B	for motor shaft	51 < L ≤ 64	24 < Ød ≤ 35	result in LB

Output

Standard

		1-stage	2-stage	3-stage
LA	[mm]	126	164	202
LB	[mm]	140	178	216

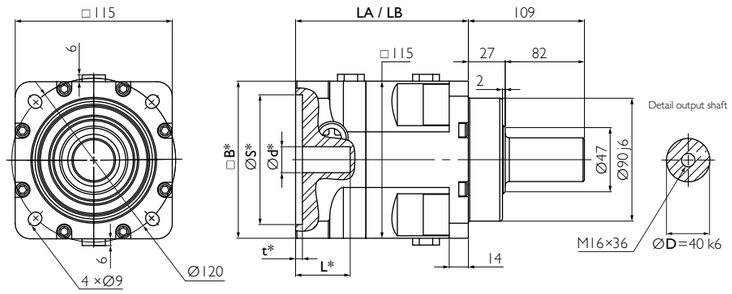

* depending on the motor. See pages 100 et seq.

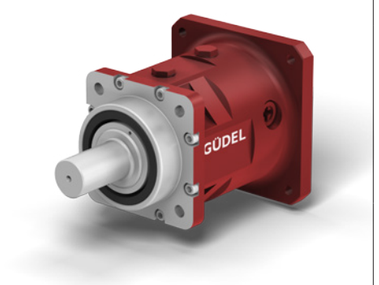

Example SR 100 A0, 1-stage

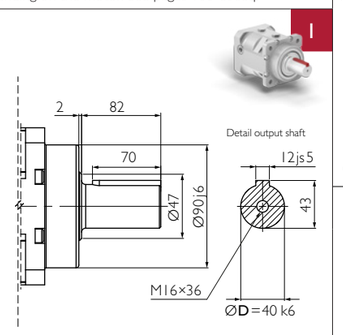

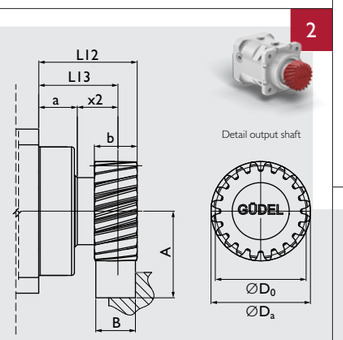

Option

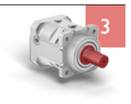

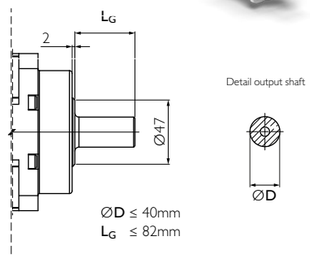

Option 3 on request. Adjustments can reduce capacity.

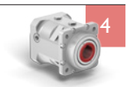

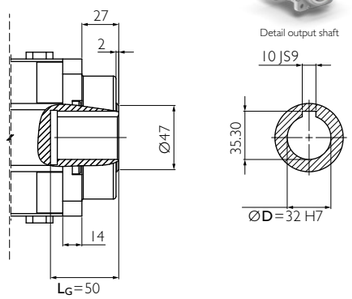

Option 4 on request. Adjustments can reduce capacity.

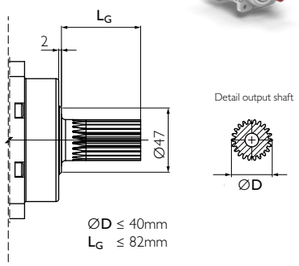

Option 5 on request. Adjustments can reduce capacity.

Your ideal Drive Train

Function Package with gearbox, rack and pinion from Güdel

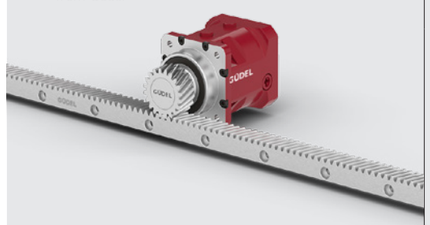

Material	16MnCr5 DIN 1.7131
Teeth	pressure angle α = 20°, helical teeth left, 19°31'42" hardened (58^{+4}_{0} HRC), ground, crowned
Quality	6f24 DIN 3962 / 63 / 67
f_p [mm]	Adjacent pitch error 0.006

Pinion

		m	z	A	b	B	D_a	D_0	L12	L13	x2	a
Pinion 1	[-]	2	25	48.526	25	24	57.05	53.052	63.3	49.8	23.8	27
Pinion 2	[-]	3	20	57.831	30	29	69.66	63.662	69	55.5	27	27

m: Module, z: Number of teeth

GÜDEL

Available ratios		i		1-stage	2-stage				
				4	12	16	20	28	40
Nominal torque S5 a)		T_{2N}	[Nm]	300	300	300	300	300	300
Acceleration torque S5 b)		T_{2B}	[Nm]	370	370	370	370	370	370
Nominal input speed S5 c)		n_{1N}	[rpm]	2 200	2 600	2 800	2 800	2 800	2 800
Maximum input speed S5		n_{1max}	[rpm]	4 000	4 000	4 000	4 000	4 000	4 000
Emergency stop torque d)		T_{2not}	[Nm]	800	800	800	800	800	800
Efficiency		η	[%]	96%	93%				
Life duration		L_h	[h]	> 20 000					
Weight		M	[kg]	8	10				
Angular backlash		j_t	[arcmin]	Precision **P 1** ≤ 1 / **P 3** ≤ 3 / **P 5** ≤ 5 / **P 12** ≤12					
Torsionnal rigidity e)		C_{t2}	[Nm/arcmin]	41.0	32.0	38.7	38.4	36.8	38.7
Noise i)		L_{pA}	[dB(A)]	≤ 71					
Max. permitted housing temperature g)		T	[°C]	90					
Protection class				IP 65					
Direction of rotation				Same way Input / Output					
Max. radial force on output shaft f)		$F_{r max}$	[N]	Center of output shaft: 6 600 / End of output shaft: 4 300					
Max. axial force on output shaft f)		$F_{a max}$	[N]	6 000					
Color				Red RAL 3003					
Inertia in kg.cm² h)	Ø14	J_1	[kgcm²]	2.83	2.76	2.69	2.23	1.83	1.60
	Ø19			2.83	2.76	2.69	2.23	1.83	1.60
	Ø24			2.84	2.77	2.70	2.24	1.84	1.61
	Ø32			6.04	5.97	5.90	5.44	5.04	4.81
	Ø35			8.67	8.60	8.53	8.07	7.67	7.44

a) Nominal output torque when operating at n_{1N}.
b) 1000 cycles per hour max.
c) Valid for an ambient temperature of 20°C and T_{2N}. At higher ambient temperatures, please reduce speed.
d) Valid 1000 times the gearbox life.
e) Valid for an input Ø of 24mm in 1-stage and 19mm in 2- and 3-stage.
f) Values for 300 rpm.
g) For other temperatures, please contact us. Nominal output torque when operating at n_{1N}.
h) Depending on the motor output shaft Ø.
i) With n_{1N}=2500 rpm no load.

T_{2B} ≤ 404 Nm

Rack

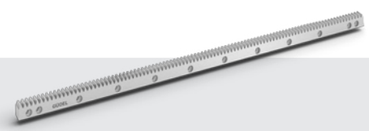

			Pinion 1	Pinion 2
Max acceleration force	F_{2B}	[N]	7 530	13 700
Max acceleration torque	T_{2B}	[Nm]	200	436

Above values for rack and pinion take into consideration a number of load cycles: 1×10^6 for the rack; 1×10^7 for the pinion. Both in pulsating operation.

For proper sizing follow Flowchart **Calculate your ideal Drive Train** on pages 106 et seq.

More on the Technical Datasheets **Your ideal Drive Train** on pages 94 et seq.

Input

A	for motor shaft	L ≤ 50	9 ≤ Ød ≤ 24	result in LA
B	for motor shaft	51 < L ≤ 64	24 < Ød ≤ 35	result in LB

Output

Standard

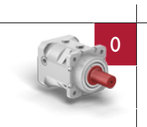

		1-stage	2-stage	3-stage
LA	[mm]	126	164	202
LB	[mm]	140	178	216

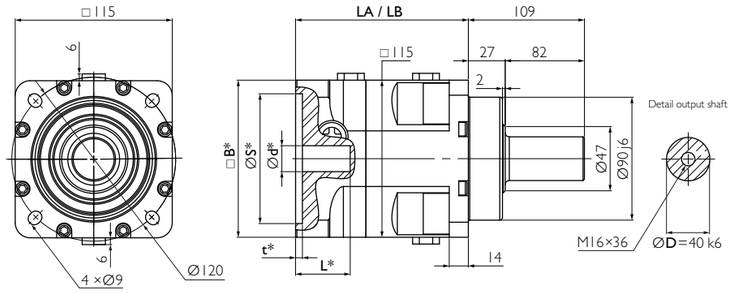

* depending on the motor. See pages 100 et seq.

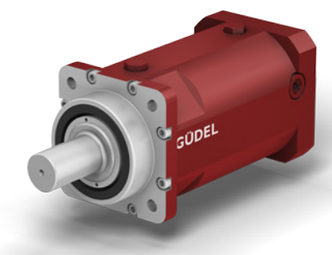

Example SR 100 A0. 3-stage

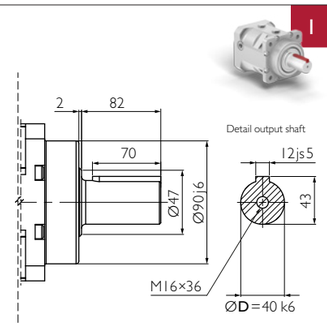

Option

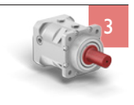

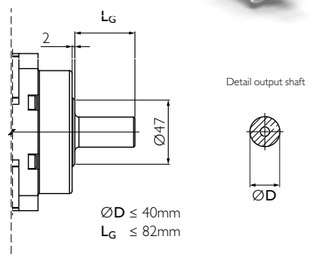

Option 3 on request. Adjustments can reduce capacity.

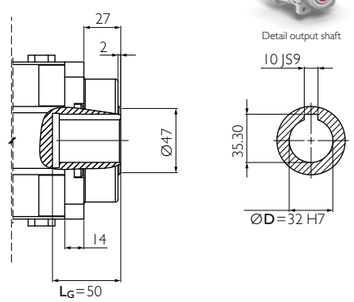

Option 4 on request. Adjustments can reduce capacity.

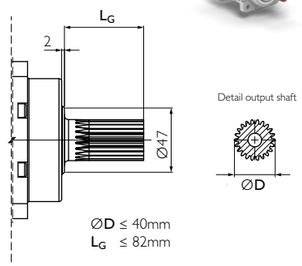

Option 5 on request. Adjustments can reduce capacity.

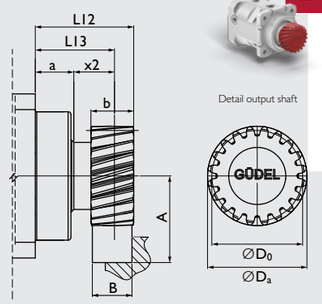

Your ideal Drive Train

Function Package with gearbox, rack and pinion from Güdel

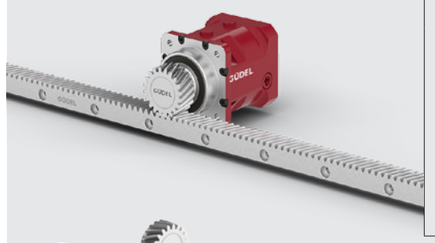

Material 16MnCr5 DIN 1.7131
Teeth pressure angle α = 20°, helical teeth left, 19°31'42"
hardened (58^{+4}_{0} HRC), ground, crowned
Quality 6f24 DIN 3962 / 63 / 67
f_p [mm] Adjacent pitch error 0.006

Pinion

		m	z	A	b	B	D_a	D_0	L12	L13	x2	a
Pinion 1	[-]	2	25	48.526	25	24	57.05	53.052	63.3	49.8	23.8	27
Pinion 2	[-]	3	20	57.831	30	29	69.66	63.662	69	55.5	27	27

m: Module, z: Number of teeth

Available ratios *		i		3-stage 60	80	100	112	120	140	160	200	280	400
Nominal torque S5 a)		T_{2N}	[Nm]	300	300	300	300	300	300	300	300	300	300
Acceleration torque S5 b)		T_{2B}	[Nm]	404	404	404	404	404	404	404	404	404	404
Nominal input speed S5 c)		n_{1N}	[rpm]	3 800	3 800	3 800	3 800	3 800	3 800	3 800	3 800	3 800	3 800
Maximum input speed S5		n_{1max}	[rpm]	4 500	4 500	4 500	4 500	4 500	4 500	4 500	4 500	4 500	4 500
Emergency stop torque d)		T_{2not}	[Nm]	800	800	800	800	800	800	800	800	800	800
Efficiency		η	[%]	90%									
Life duration		L_h	[h]	> 20 000									
Weight		M	[kg]	12									
Angular backlash		j_t	[arcmin]	Precision **P 1** ≤ 1 / **P 3** ≤ 3 / **P 5** ≤ 5 / **P 12** ≤12									
Torsionnal rigidity e)		C_{t2}	[Nm/arcmin]	38.4	38.4	34.3	37.0	37.0	38.4	37.0	38.4	37.0	37.0
Noise i)		L_{pA}	[dB(A)]	≤ 71									
Max. permitted housing temperature g)		T	[°C]	90									
Protection class				IP 65									
Direction of rotation				Same way Input / Output									
Max. radial force on output shaft f)		F_{rmax}	[N]	Center of output shaft: 6 600 / End of output shaft: 4 300									
Max. axial force on output shaft f)		F_{amax}	[N]	6 000									
Color				Red RAL 3003									
Inertia in kg.cm² h)	Ø14	J_1	[kgcm²]	2.23	2.22	1.59	1.83	1.59	1.82	1.60	1.59	1.59	1.59
	Ø19			2.23	2.22	1.59	1.83	1.59	1.82	1.60	1.59	1.59	1.59
	Ø24			2.24	2.23	1.60	1.84	1.61	1.83	1.61	1.60	1.60	1.60
	Ø32			5.44	5.43	4.80	5.04	4.80	5.03	4.81	4.80	4.80	4.80
	Ø35			8.07	8.06	7.43	7.67	7.44	7.66	7.44	7.43	7.43	7.43

* Other ratios available. 36, 64, 84, 180, 196, 300, 360, 500, 600, 700, 1000 on request.
a) Nominal output torque when operating at n_{1N}.
b) 1000 cycles per hour max.
c) Valid for an ambient temperature of 20°C and T_{2N}. At higher ambient temperatures, please reduce speed.
d) Valid 1000 times the gearbox life.
e) Valid for an input Ø of 24mm in 1-stage and 19mm in 2- and 3-stage.
f) Values for 300 rpm.
g) For other temperatures, please contact us. Nominal output torque when operating at n_{1N}.
h) Depending on the motor output shaft Ø.
i) With n_{1N}=2500 rpm no load.

3-stage | 100 | SR | T_{2B} ≤ 404 Nm

Rack

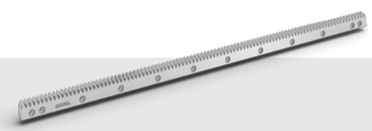

			Pinion 1	Pinion 2
Max acceleration force	F_{2B}	[N]	7 530	13 700
Max acceleration torque	T_{2B}	[Nm]	200	436

Above values for rack and pinion take into consideration a number of load cycles: 1×10^6 for the rack; 1×10^7 for the pinion. Both in pulsating operation.

For proper sizing follow Flowchart **Calculate your ideal Drive Train** on pages 106 et seq.

More on the Technical Datasheets **Your ideal Drive Train** on pages 94 et seq.

Input

A	for motor shaft	L ≤ 50	9 ≤ Ød ≤ 24	result in LA
B	for motor shaft	51 < L ≤ 64	24 < Ød ≤ 35	result in LB

Output

Standard

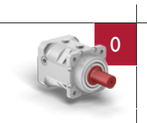

		1-stage	2-stage	3-stage
LA	[mm]	126	164	202
LB	[mm]	140	178	216

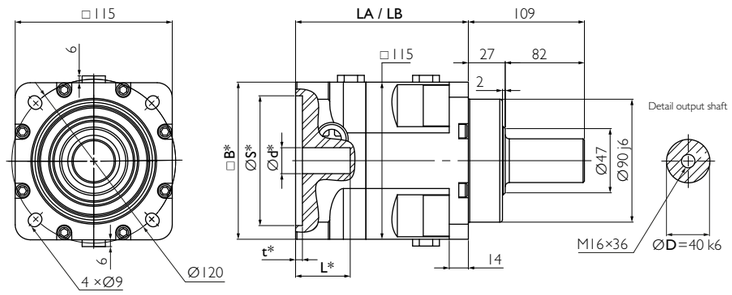

* depending on the motor. See pages 100 et seq.

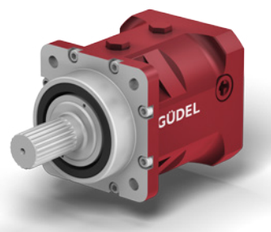

Example PR 100 A5, 1-stage

Option

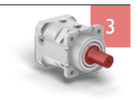

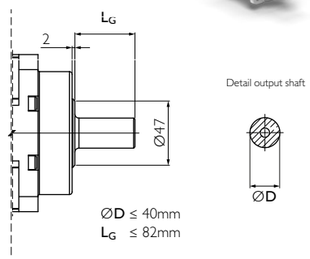

Option 3 on request. Adjustments can reduce capacity.

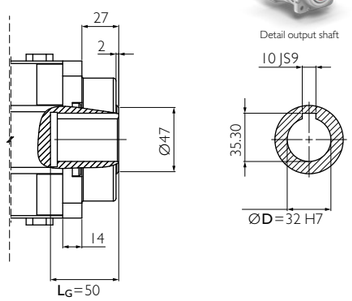

Option 4 on request. Adjustments can reduce capacity.

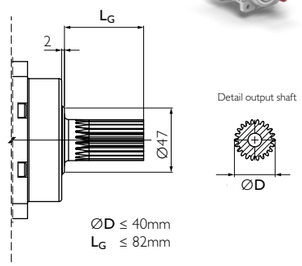

Option 5 on request. Adjustments can reduce capacity.

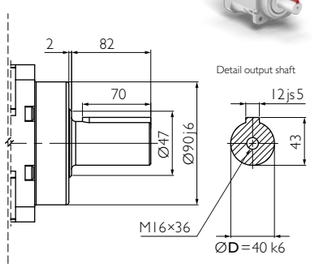

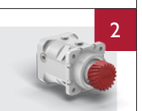

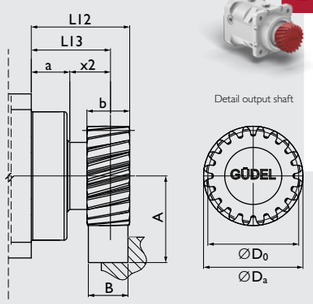

Option 2 on request. Adjustments can reduce capacity.

Material	16MnCr5 DIN 1.7131
Teeth	pressure angle α = 20°, helical teeth left, 19°31'42" hardened (58^{+4}_{0} HRC), ground, crowned
Quality	6f24 DIN 3962 / 63 / 67
f_p [mm]	Adjacent pitch error 0.006

Your ideal Drive Train

Function Package with gearbox, rack and pinion from Güdel

Pinion

Pinion for PR on request

GÜDEL

Available ratios		i		1-stage	2-stage				
				3	9	12	15	21	30
Nominal torque S5 a)		T_{2N}	[Nm]	348	350	350	350	350	350
Acceleration torque S5 b)		T_{2B}	[Nm]	556	500	500	500	500	500
Nominal input speed S5 c)		n_{1N}	[rpm]	2 000	2 000	2 300	2 500	2 500	2 500
Maximum input speed S5		n_{1max}	[rpm]	3 200	3 200	3 600	3 600	3 600	3 600
Emergency stop torque d)		T_{2not}	[Nm]	870	785	785	785	785	785
Efficiency		η	[%]	94%	91%				
Life duration		L_h	[h]	> 20 000					
Weight		M	[kg]	8	10				
Angular backlash		j_t	[arcmin]	Precision **P 1** ≤ 1 / **P 3** ≤ 3 / **P 5** ≤ 5 / **P 12** ≤12					
Torsionnal rigidity e)		C_{t2}	[Nm/arcmin]	37.0	35.2	35.2	35.2	35.2	35.2
Noise i)		L_{pA}	[dB(A)]	≤ 71					
Max. permitted housing temperature g)		T	[°C]	90					
Protection class				IP 65					
Direction of rotation				Same way Input / Output					
Max. radial force on output shaft f)		$F_{r max}$	[N]	Center of output shaft: 6 600 / End of output shaft: 4 300					
Max. axial force on output shaft f)		$F_{a max}$	[N]	6 000					
Color				Red RAL 3003					
Inertia in kg.cm² h)	Ø14	J_1	[kgcm²]	4.08	3.97	2.76	2.33	1.86	1.61
	Ø19			4.08	3.97	2.76	2.33	1.86	1.61
	Ø24			4.09	3.98	2.77	2.34	1.87	1.62
	Ø32			7.29	7.18	5.97	5.54	5.07	4.82
	Ø35			9.9	9.81	8.60	8.17	7.70	7.45

a) Nominal output torque when operating at n_{1N}.
b) 1000 cycles per hour max.
c) Valid for an ambient temperature of 20°C and T_{2N}. At higher ambient temperatures, please reduce speed.
d) Valid 1000 times the gearbox life.
e) Valid for an input Ø of 24mm in 1-stage and 19mm in 2- and 3-stage.
f) Values for 300 rpm.
g) For other temperatures, please contact us. Nominal output torque when operating at n_{1N}.
h) Depending on the motor output shaft Ø.
i) With n_{1N}=2500 rpm no load.

T_{2B} ≤ 556 Nm

Rack

Rack for PR on request

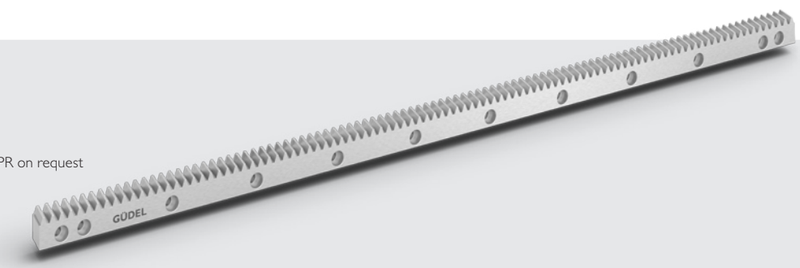

For proper sizing follow Flowchart **Calculate your ideal Drive Train** on pages 106 et seq.

More on the Technical Datasheets **Your ideal Drive Train** on pages 94 et seq.

Input

A	for motor shaft	L ≤ 50	9 ≤ Ød ≤ 24	result in LA
B	for motor shaft	51 < L ≤ 64	24 < Ød ≤ 35	result in LB

Output

Standard

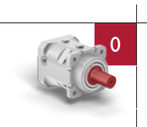

		1-stage	2-stage	3-stage
LA	[mm]	126	164	202
LB	[mm]	140	178	216

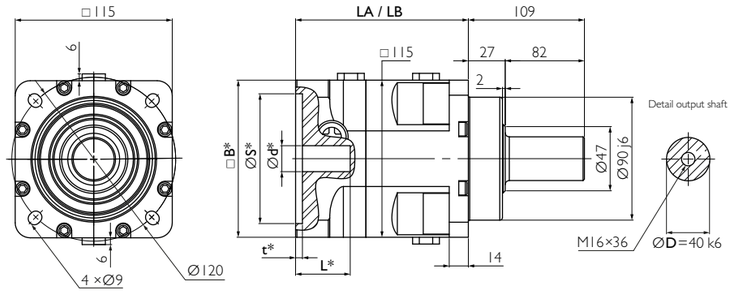

* depending on the motor. See pages 100 et seq.

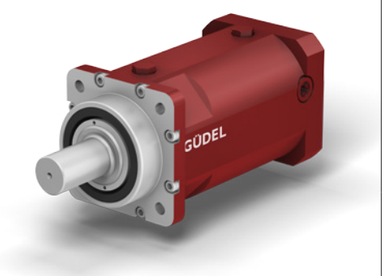

Example PR 100 A0, 3-stage

Option

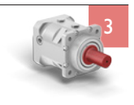

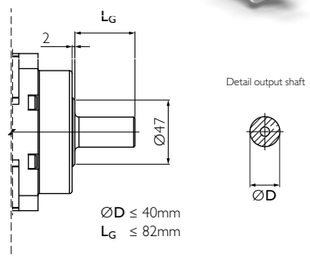

Option 3 on request. Adjustments can reduce capacity.

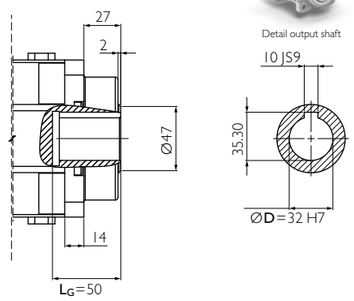

Option 4 on request. Adjustments can reduce capacity.

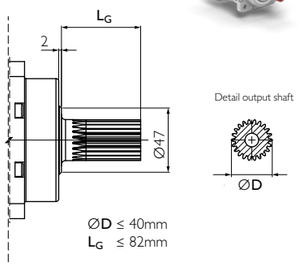

Option 5 on request. Adjustments can reduce capacity.

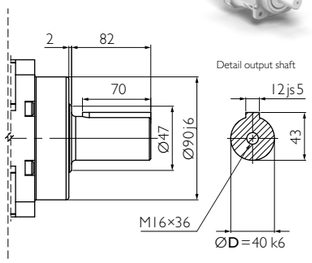

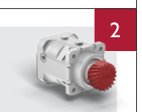

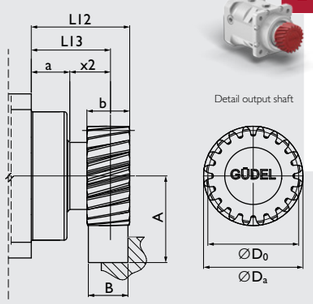

Option 2 on request. Adjustments can reduce capacity.

Your ideal Drive Train

Function Package with gearbox, rack and pinion from Güdel

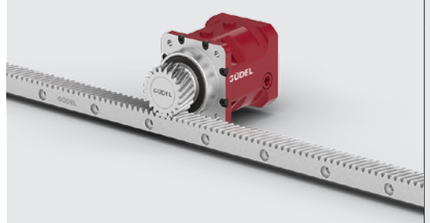

Material	16MnCr5 DIN 1.7131
Teeth	pressure angle α = 20°, helical teeth left, 19°31'42" hardened (58^{+4}_{0} HRC), ground, crowned
Quality	6f24 DIN 3962 / 63 / 67
f_p [mm]	Adjacent pitch error 0.006

Pinion

Pinion for PR on request

Available ratios *		i		3-stage 36	45	60	75	90	105	120	150	210	300
Nominal torque S5 a)		T_{2N}	[Nm]	350	350	350	350	350	350	350	350	350	350
Acceleration torque S5 b)		T_{2B}	[Nm]	500	500	500	500	500	500	500	500	500	500
Nominal input speed S5 c)		n_{1N}	[rpm]	2 700	3 300	3 300	3 300	3 300	3 300	3 300	3 300	3 300	3 300
Maximum input speed S5		n_{1max}	[rpm]	4 000	4 000	4 000	4 000	4 000	4 000	4 000	4 000	4 000	4 000
Emergency stop torque d)		T_{2not}	[Nm]	785	785	785	785	785	785	785	785	785	785
Efficiency		η	[%]	88%									
Life duration		L_h	[h]	> 20 000									
Weight		M	[kg]	12									
Angular backlash		j_t	[arcmin]	Precision **P 1** ≤ 1 / **P 3** ≤ 3 / **P 5** ≤ 5 / **P 12** ≤12									
Torsionnal rigidity e)		C_{t2}	[Nm/arcmin]	33.5	33.5	42.2	42.2	33.5	42.2	40.4	42.2	43.1	40.4
Noise i)		L_{pA}	[dB(A)]	≤ 71									
Max. permitted housing temperature g)		T	[°C]	90									
Protection class				IP 65									
Direction of rotation				Same way Input / Output									
Max. radial force on output shaft f)		F_{rmax}	[N]	Center of output shaft: 6 600 / End of output shaft: 4 300									
Max. axial force on output shaft f)		F_{amax}	[N]	6 000									
Color				Red RAL 3003									
Inertia in kg.cm² h)	Ø14	J_1	[kgcm²]	2.76	2.28	2.23	2.21	1.61	1.82	1.60	1.59	1.59	1.59
	Ø19			2.76	2.28	2.23	2.21	1.61	1.82	1.60	1.59	1.59	1.59
	Ø24			2.77	2.29	2.24	2.22	1.62	1.83	1.61	1.60	1.60	1.60
	Ø32			5.97	5.49	5.44	5.42	4.82	5.03	4.81	4.80	4.80	4.80
	Ø35			8.60	8.12	8.07	8.05	7.45	7.66	7.44	7.43	7.43	7.43

* Other ratios available. 27, 48, 63, 84, 147 on request.
a) Nominal output torque when operating at n_{1N}.
b) 1000 cycles per hour max.
c) Valid for an ambient temperature of 20°C and T_{2N}. At higher ambient temperatures, please reduce speed.
d) Valid 1000 times the gearbox life.
e) Valid for an input Ø of 24mm in 1-stage and 19mm in 2- and 3-stage.
f) Values for 300 rpm.
g) For other temperatures, please contact us. Nominal output torque when operating at n_{1N}.
h) Depending on the motor output shaft Ø.
i) With n_{1N}=2500 rpm no load.

T_{2B} ≤ 556 Nm

Rack

Rack for PR on request

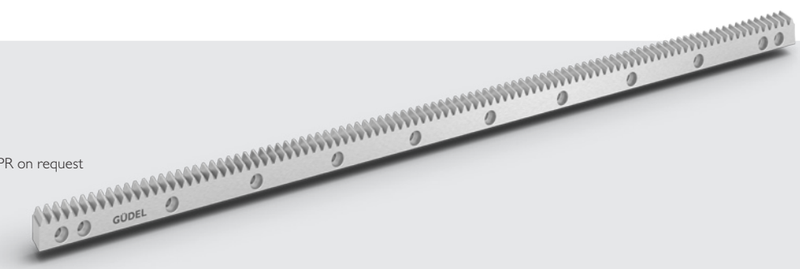

For proper sizing follow Flowchart **Calculate your ideal Drive Train** on pages 106 et seq.

More on the Technical Datasheets **Your ideal Drive Train** on pages 94 et seq.

Input

A	for motor shaft	L ≤ 50	9 ≤ Ød ≤ 24	result in LA
B	for motor shaft	51 < L ≤ 64	24 < Ød ≤ 35	result in LB
C	for motor shaft	63 < L ≤ 83	24 < Ød ≤ 42	result in LC

		1-stage	2-stage	3-stage
LA	[mm]	143	185	227
LB	[mm]	155	197	239
LC	[mm]	175	217	

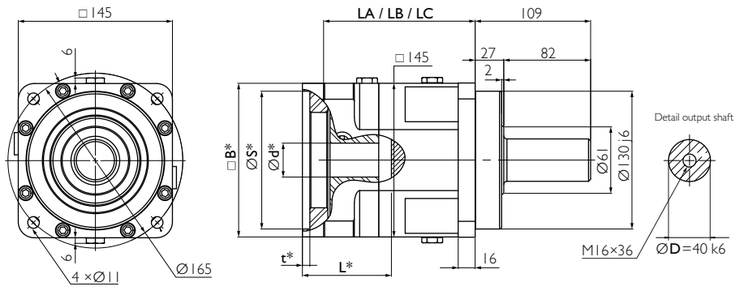

* depending on the motor. See pages 100 et seq.

Output

Standard

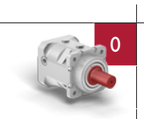

Example NR 140 C0, 1-stage

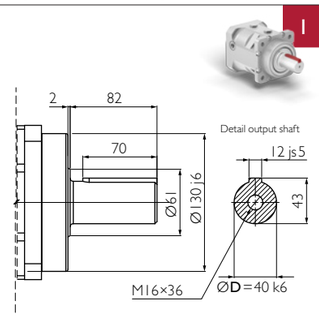

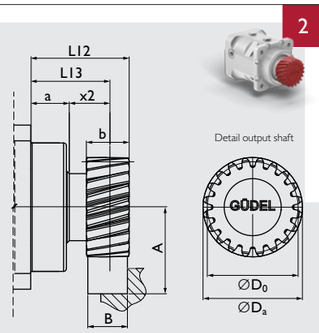

Option

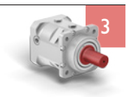

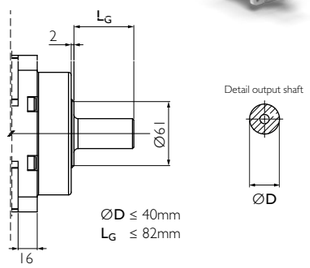

Option 3 on request. Adjustments can reduce capacity.

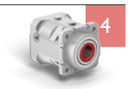

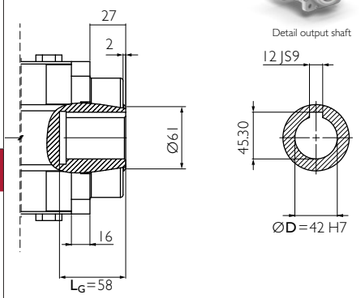

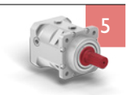

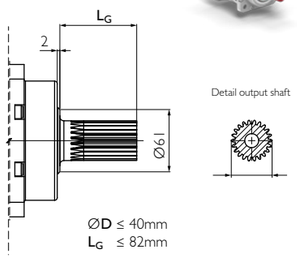

Option 5 on request. Adjustments can reduce capacity.

Material	16MnCr5 DIN 1.7131
Teeth	pressure angle α = 20°, helical teeth left, 19°31'42" hardened (58^{+4}_{0} HRC), ground, crowned
Quality	6f24 DIN 3962 / 63 / 67
f_p [mm]	Adjacent pitch error 0.006

Your ideal Drive Train

Function Package with gearbox, rack and pinion from Güdel

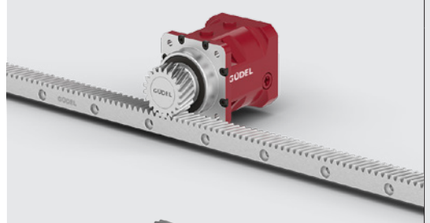

Pinion

		m	z	A	b	B	D_a	D_0	L12	L13	x2	a
Pinion 1	[-]	3	22	61.014	30	29	76.03	70.028	69.5	56	27.5	27
Pinion 2	[-]	4	20	77.441	40	39	92.88	84.883	79	65.5	32	27

m: Module, z: Number of teeth

GÜDEL

Available ratios		i		1-stage 3	4	5	7	10
Nominal torque S5 a)		T_{2N}	[Nm]	390	480	490	450	270
Acceleration torque S5 b)		T_{2B}	[Nm]	500	600	600	540	476
Nominal input speed S5 c)		n_{1N}	[rpm]	2 100	2 100	2 100	2 600	2 600
Maximum input speed S5		n_{1max}	[rpm]	3 500	4 000	4 000	4 000	4 000
Nominal torque S1 a)		T_{2N}	[Nm]	150	250	250	250	125
Acceleration torque S1 b)		T_{2B}	[Nm]	250	365	365	365	220
Nominal input speed S1 c)		n_{1N}	[rpm]	1 500	1 900	1 900	2 300	2 300
Maximum input speed S1		n_{1max}	[rpm]	2 100	2 100	2 100	2 600	2 600
Emergency stop torque d)		T_{2not}	[Nm]	1 250	1 300	1 300	1 100	900
Efficiency		η	[%]	97%				
Life duration		L_h	[h]	> 20 000				
Weight		M	[kg]	14				
Angular backlash		j_t	[arcmin]	Precision **P 1** ≤ 1 / **P 3** ≤ 3 / **P 5** ≤ 5 / **P 12** ≤12				
Torsionnal rigidity e)		C_{t2}	[Nm/arcmin]	89.9	101.3	108.0	106.2	98.9
Noise i)		L_{pA}	[dB(A)]	≤ 70				
Max. permitted housing temperature g)		T	[°C]	90				
Protection class				IP 65				
Direction of rotation				Same way Input / Output				
Max. radial force on output shaft f)		$F_{r\,max}$	[N]	Center of output shaft: 9 950 / End of output shaft: 6 700				
Max. axial force on output shaft f)		$F_{a\,max}$	[N]	10 300				
Color				Red RAL 3003				
Inertia in kg.cm² h)	Ø14	J_1	[kgcm²]	10.98	7.12	5.60	4.31	3.56
	Ø19			10.98	7.12	5.60	4.31	3.56
	Ø24			11.99	8.13	6.61	5.32	4.57
	Ø32			14.19	10.33	8.81	7.52	6.77
	Ø35			17.02	13.16	11.64	10.35	9.60
	Ø38			22.21	18.35	16.83	15.54	14.79
	Ø42			21.81	17.95	16.43	15.14	14.39

a) Nominal output torque when operating at n_{1N}.
b) 1000 cycles per hour max.
c) Valid for an ambient temperature of 20°C and T_{2N}. At higher ambient temperatures, please reduce speed.
d) Valid 1000 times the gearbox life.
e) Valid for an input Ø of 38mm in 1-stage and 24mm in 2- and 3-stage.
f) Values for 300 rpm.
g) For other temperatures, please contact us. Nominal output torque when operating at n_{1N}.
h) Depending on the motor output shaft Ø.
i) With i=10 and n_{1N}=3000 rpm no load.

Rack

			Pinion 1	Pinion 2
Max acceleration force	F_{2B}	[N]	13 770	25 420
Max acceleration torque	T_{2B}	[Nm]	482	1 079

Above values for rack and pinion take into consideration a number of load cycles: 1×10^6 for the rack; 1×10^7 for the pinion. Both in pulsating operation.

For proper sizing follow Flowchart **Calculate your ideal Drive Train** on pages 106 et seq.

More on the Technical Datasheets **Your ideal Drive Train** on pages 94 et seq.

Input

A	for motor shaft	L ≤ 51	14 ≤ Ød ≤ 24	result in LA
B	for motor shaft	51 < L ≤ 63	24 < Ød ≤ 35	result in LB
C	for motor shaft	63 < L ≤ 83	24 < Ød ≤ 42	result in LC

Output

Standard

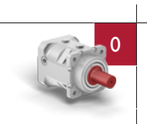

		1-stage	2-stage	3-stage
LA	[mm]	143	185	227
LB	[mm]	155	197	239
LC	[mm]	175	217	

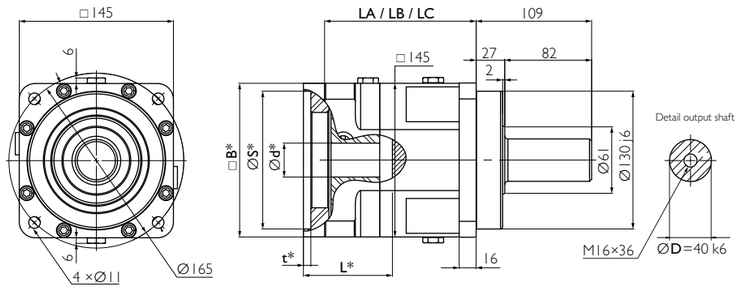

* depending on the motor. See pages 100 et seq.

Option

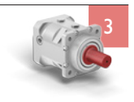

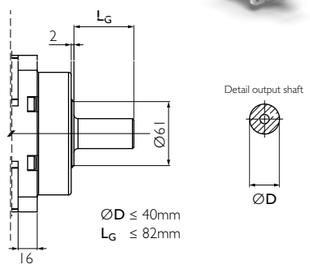

Option 3 on request. Adjustments can reduce capacity.

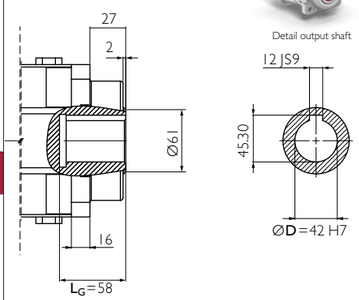

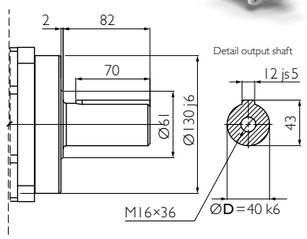

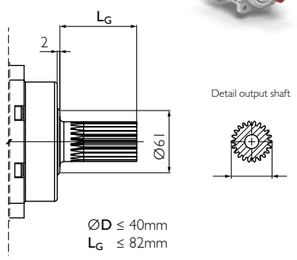

Option 5 on request. Adjustments can reduce capacity.

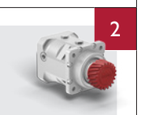

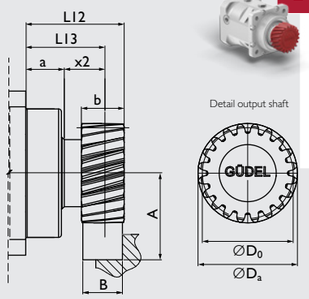

Your ideal Drive Train

Function Package with gearbox, rack and pinion from Güdel

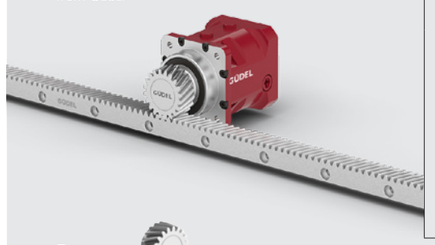

Material	16MnCr5 DIN 1.7131
Teeth	pressure angle α = 20°, helical teeth left, 19°31'42" hardened (58+4 0 HRC), ground, crowned
Quality	6f24 DIN 3962 / 63 / 67
f_p [mm]	Adjacent pitch error 0.006

Pinion

		m	z	A	b	B	D_a	D_0	L12	L13	x2	a
Pinion 1	[-]	3	22	61.014	30	29	76.03	70.028	69.5	56	27.5	27
Pinion 2	[-]	4	20	77.441	40	39	92.88	84.883	79	65.5	32	27

m: Module, z: Number of teeth

GÜDEL

Available ratios *		i		2-stage									
				12	16	20	25	30	35	40	50	70	100
Nominal torque S5 a)		T_{2N}	[Nm]	390	480	490	490	390	490	480	490	450	270
Acceleration torque S5 b)		T_{2B}	[Nm]	500	600	600	600	600	600	600	600	540	476
Nominal input speed S5 c)		n_{1N}	[rpm]	2 700	2 900	2 900	2 900	2 900	2 900	2 900	3 200	3 200	3 900
Maximum input speed S5		n_{1max}	[rpm]	4 000	4 000	4 000	4 000	4 000	4 000	4 000	4 000	4 000	4 000
Nominal torque S1 a)		T_{2N}	[Nm]	250	250	250	250	250	250	250	250	250	220
Acceleration torque S1 b)		T_{2B}	[Nm]	365	365	365	365	365	365	365	365	365	365
Nominal input speed S1 c)		n_{1N}	[rpm]	1 900	2 600	2 600	2 600	2 600	2 600	2 600	2 900	2 900	3 500
Maximum input speed S1		n_{1max}	[rpm]	2 700	2 900	2 900	2 900	2 900	2 900	2 900	3 200	3 200	3 900
Emergency stop torque d)		T_{2not}	[Nm]	1 250	1 300	1 300	1 300	1 250	1 300	1 300	1 300	1 100	900
Efficiency		η	[%]	94%									
Life duration		L_h	[h]	> 2 0 000									
Weight		M	[kg]	18									
Angular backlash		j_t	[arcmin]	Precision **P 1** ≤ 1 / **P 3** ≤ 3 / **P 5** ≤ 5 / **P 12** ≤12									
Torsionnal rigidity e)		C_{t2}	[Nm/arcmin]	80.9	91.1	97.2	97.2	80.9	97.2	91.1	97.2	95.4	80.0
Noise i)		L_{pA}	[dB(A)]	≤ 70									
Max. permitted housing temperature g)		T	[°C]	90									
Protection class				IP 65									
Direction of rotation				Same way Input / Output									
Max. radial force on output shaft f)		$F_{r\,max}$	[N]	Center of output shaft: 9 950 / End of output shaft: 6 700									
Max. axial force on output shaft f)		$F_{a\,max}$	[N]	10 300									
Color				Red RAL 3003									
Inertia in kg.cm² h)	Ø14	J_1	[kgcm²]	6.86	6.63	5.29	5.23	3.52	4.12	3.48	3.46	3.45	3.44
	Ø19			6.86	6.63	5.29	5.23	3.52	4.12	3.48	3.46	3.45	3.44
	Ø24			7.87	7.64	6.30	6.24	4.53	5.13	4.49	4.47	4.46	4.45
	Ø32			10.07	9.84	8.50	8.44	6.73	7.33	6.69	6.67	6.66	6.65
	Ø35			12.90	12.67	11.33	11.27	9.56	10.16	9.52	9.50	9.49	9.48
	Ø38			18.09	17.86	16.52	16.46	14.75	15.35	14.71	14.69	14.68	14.67
	Ø42			17.69	17.46	16.12	16.06	14.35	14.95	14.31	14.29	14.28	14.27

* Other ratios available. 9, 15, 21, 27, 28, 49 on request.
a) Nominal output torque when operating at n_{1N}.
b) 1000 cycles per hour max.
c) Valid for an ambient temperature of 20°C and T_{2N}. At higher ambient temperatures, please reduce speed.
d) Valid 1000 times the gearbox life.
e) Valid for an input Ø of 38mm in 1-stage and 24mm in 2- and 3-stage.
f) Values for 300 rpm.
g) For other temperatures, please contact us. Nominal output torque when operating at n_{1N}.
h) Depending on the motor output shaft Ø.
i) With i=10 and n_{1N}=3000 rpm no load.

Rack

			Pinion 1	Pinion 2
Max acceleration force	F_{2B}	[N]	13 770	25 420
Max acceleration torque	T_{2B}	[Nm]	482	1 079

Above values for rack and pinion take into consideration a number of load cycles: 1×10^6 for the rack; 1×10^7 for the pinion. Both in pulsating operation.

For proper sizing follow Flowchart **Calculate your ideal Drive Train** on pages 106 et seq.

More on the Technical Datasheets **Your ideal Drive Train** on pages 94 et seq.

T_{2B} ≤ 600 Nm

Input

A	for motor shaft	L ≤ 51	14 ≤ Ød ≤ 24	result in LA
B	for motor shaft	51 < L ≤ 63	24 < Ød ≤ 35	result in LB
C	for motor shaft	63 < L ≤ 83	24 < Ød ≤ 42	result in LC

Output

Standard

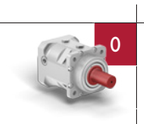

		1-stage	2-stage	3-stage
LA	[mm]	143	185	227
LB	[mm]	155	197	239
LC	[mm]	175	217	

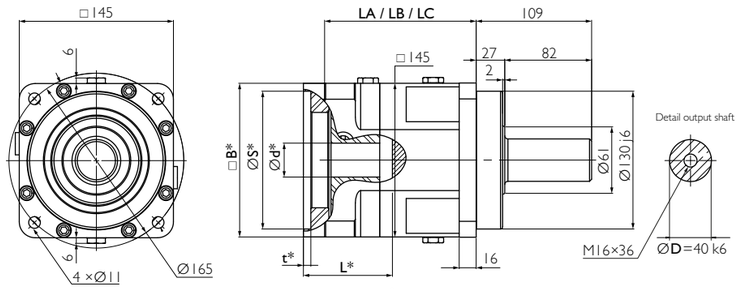

* depending on the motor. See pages 100 et seq.

Option

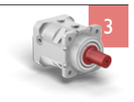

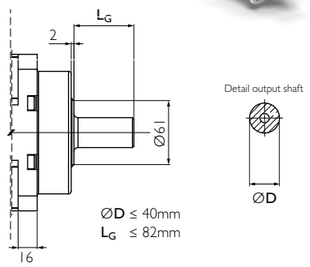

Option 3 on request. Adjustments can reduce capacity.

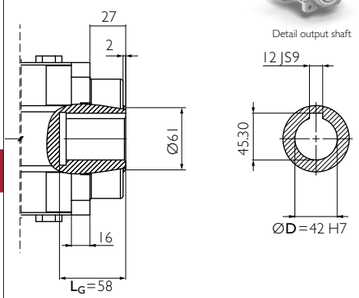

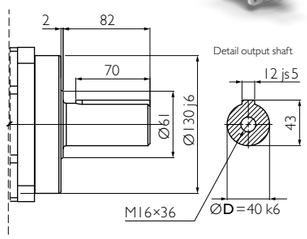

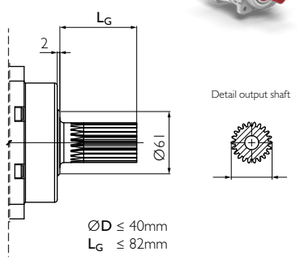

Option 5 on request. Adjustments can reduce capacity.

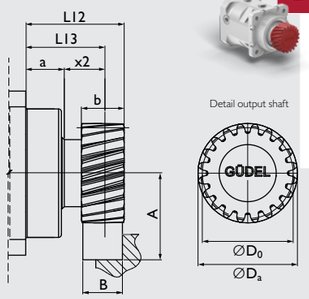

Example NR 140 A4, 1-stage

Your ideal Drive Train

Function Package with gearbox, rack and pinion from Güdel

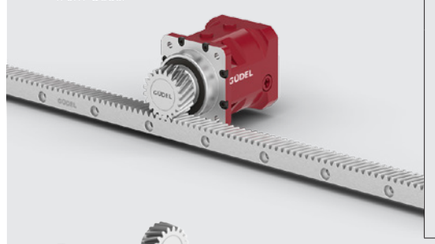

Material	16MnCr5 DIN 1.7131
Teeth	pressure angle α = 20°, helical teeth left, 19°31'42" hardened (58$^{+4}_{0}$ HRC), ground, crowned
Quality	6f24 DIN 3962 / 63 / 67
f_p [mm]	Adjacent pitch error 0.006

Pinion

		m	z	A	b	B	D_a	D_0	L12	L13	x2	a
Pinion 1	[-]	3	22	61.014	30	29	76.03	70.028	69.5	56	27.5	27
Pinion 2	[-]	4	20	77.441	40	39	92.88	84.883	79	65.5	32	27

m: Module, z: Number of teeth

GÜDEL

Available ratios *			3-stage									
	i		105	125	175	200	250	300	400	500	700	1 000
Nominal torque S5 a)	T_{2N}	[Nm]	490	490	490	490	490	390	480	490	450	270
Acceleration torque S5 b)	T_{2B}	[Nm]	600	600	600	600	600	600	600	600	540	476
Nominal input speed S5 c)	n_{1N}	[rpm]	3 900	3 900	3 900	3 900	3 900	3 900	3 900	3 900	3 900	3 900
Maximum input speed S5	n_{1max}	[rpm]	4 500	4 500	4 500	4 500	4 500	4 500	4 500	4 500	4 500	4 500
Nominal torque S1 a)	T_{2N}	[Nm]	270	270	270	270	270	270	270	270	270	270
Acceleration torque S1 b)	T_{2B}	[Nm]	365	365	365	365	365	365	365	365	365	365
Nominal input speed S1 c)	n_{1N}	[rpm]	3 500	3 500	3 500	3 500	3 500	3 500	3 500	3 500	3 500	3 500
Maximum input speed S1	n_{1max}	[rpm]	3 900	3 900	3 900	3 900	3 900	3 900	3 900	3 900	3 900	3 900
Emergency stop torque d)	T_{2not}	[Nm]	1 300	1 300	1 300	1 300	1 300	1 250	1 300	1 300	1 100	900
Efficiency	η	[%]	91%									
Life duration	L_h	[h]	> 20 000									
Weight	M	[kg]	22									
Angular backlash	j_t	[arcmin]	Precision **P 1** ≤ 1 / **P 3** ≤ 3 / **P 5** ≤ 5 / **P 12** ≤12									
Torsionnal rigidity e)	C_{t2}	[Nm/arcmin]	87	87	87	87	87	73	82	87	86	80
Noise i)	L_{pA}	[dB(A)]	≤ 70									
Max. permitted housing temperature g)	T	[°C]	90									
Protection class			IP 65									
Direction of rotation			Same way Input / Output									
Max. radial force on output shaft f)	$F_{r max}$	[N]	Center of output shaft: 9 950 / End of output shaft: 6 700									
Max. axial force on output shaft f)	$F_{a max}$	[N]	10 300									
Color			Red RAL 3003									
Inertia in kg.cm² h) Ø14	J_1	[kgcm²]	4.11	5.21	4.11	3.46	3.46	3.44	3.44	3.44	3.44	3.44
Ø19			4.11	5.21	4.11	3.46	3.46	3.44	3.44	3.44	3.44	3.44
Ø24			5.12	6.22	5.12	4.47	4.47	4.45	4.45	4.45	4.45	4.45
Ø32			7.32	8.42	7.32	6.67	6.67	6.65	6.65	6.65	6.65	6.65
Ø35			10.15	11.25	10.15	9.50	9.50	9.48	9.48	9.48	9.48	9.48
Ø38			15.34	16.44	15.34	14.69	14.69	14.67	14.67	14.67	14.67	14.67
Ø42			14.94	16.04	14.94	14.29	14.29	14.27	14.27	14.27	14.27	14.27

* Other ratios available. 112, 120, 140, 147, 150, 160, 196, 210, 245, 280, 343, 350, 490 on request.
a) Nominal output torque when operating at n_{1N}.
b) 1000 cycles per hour max.
c) Valid for an ambient temperature of 20°C and T_{2N}. At higher ambient temperatures, please reduce speed.
d) Valid 1000 times the gearbox life.
e) Valid for an input Ø of 38mm in 1-stage and 24mm in 2- and 3-stage.
f) Values for 300 rpm.
g) For other temperatures, please contact us. Nominal output torque when operating at n_{1N}.
h) Depending on the motor output shaft Ø.
i) With i=10 and n_{1N}=3000 rpm no load.

Rack

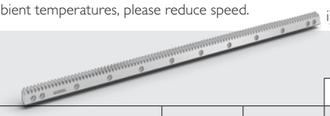

			Pinion 1	Pinion 2
Max acceleration force	F_{2B}	[N]	13 770	25 420
Max acceleration torque	T_{2B}	[Nm]	482	1 079

Above values for rack and pinion take into consideration a number of load cycles: 1×10^6 for the rack; 1×10^7 for the pinion. Both in pulsating operation.

For proper sizing follow Flowchart **Calculate your ideal Drive Train** on pages 106 et seq.

More on the Technical Datasheets **Your ideal Drive Train** on pages 94 et seq.

Input

A	for motor shaft	L ≤ 51	14 ≤ Ød ≤ 24	result in LA
B	for motor shaft	51 < L ≤ 63	24 < Ød ≤ 35	result in LB
C	for motor shaft	63 < L ≤ 83	24 < Ød ≤ 42	result in LC

		1-stage	2-stage	3-stage
LA	[mm]	143	185	227
LB	[mm]	155	197	239
LC	[mm]	175	217	

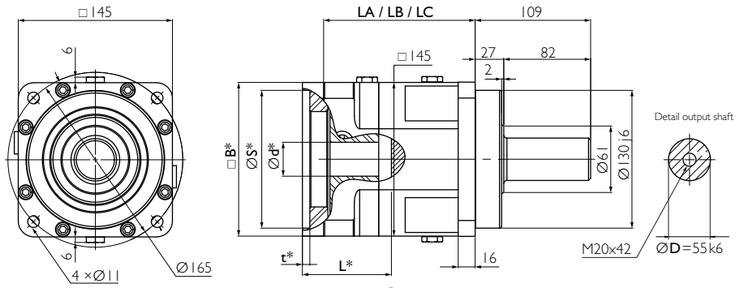

* depending on the motor. See pages 100 et seq.

Example SR 140 A2, 1-stage

Output

Standard

0

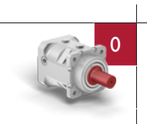

1

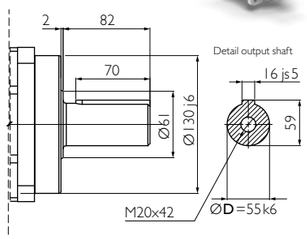

2

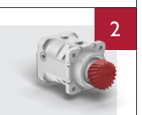

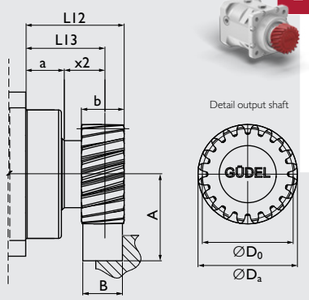

Option

3

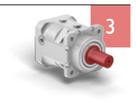

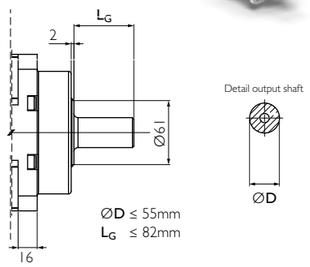

Option 3 on request. Adjustments can reduce capacity.

4

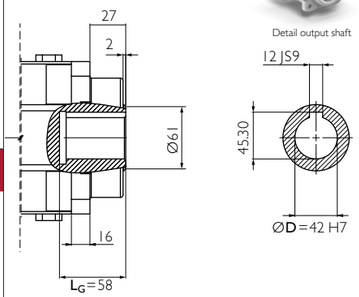

Option 4 on request. Adjustments can reduce capacity.

5

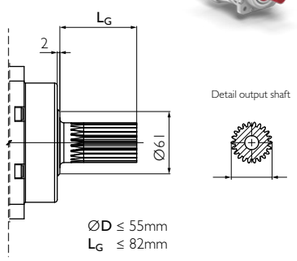

Option 5 on request. Adjustments can reduce capacity.

Your ideal Drive Train

Function Package with gearbox, rack and pinion from Güdel

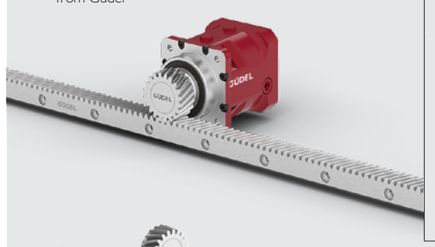

Material 16MnCr5 DIN 1.7131
Teeth pressure angle α = 20°, helical teeth left, 19°31'42"
hardened (58$^{+4}_{0}$ HRC), ground, crowned
Quality 6f24 DIN 3962 / 63 / 67
f_p [mm] Adjacent pitch error 0.006

Pinion

		m	z	A	b	B	D_a	D_0	L12	L13	x2	a
Pinion 1	[-]	3	22	61.014	30	29	76.03	70.028	69.5	56	27.5	27
Pinion 2	[-]	4	20	77.441	40	39	92.88	84.883	79	65.5	32	27

m: Module, z: Number of teeth

GÜDEL

Available ratios		i		1-stage	2-stage				
				4	12	16	20	28	40
Nominal torque S5 a)		T_{2N}	[Nm]	500	500	500	500	500	500
Acceleration torque S5 b)		T_{2B}	[Nm]	750	750	750	750	750	750
Nominal input speed S5 c)		n_{1N}	[rpm]	1 900	2 400	2 600	2 600	2 600	2 600
Maximum input speed S5		n_{1max}	[rpm]	3 600	3 600	3 600	3 600	3 600	3 600
Emergency stop torque d)		T_{2not}	[Nm]	1 300	1 300	1 300	1 300	1 300	1 300
Efficiency		η	[%]	96%	93%				
Life duration		L_h	[h]	> 2 0 000					
Weight		M	[kg]	14	18				
Angular backlash		j_t	[arcmin]	Precision **P 1** ≤ 1 / **P 3** ≤ 3 / **P 5** ≤ 5 / **P 12** ≤12					
Torsionnal rigidity e)		C_{t2}	[Nm/arcmin]	106.2	85.0	95.7	102.1	95.7	95.7
Noise i)		L_{pA}	[dB(A)]	≤ 71					
Max. permitted housing temperature g)		T	[°C]	90					
Protection class				IP 65					
Direction of rotation				Same way Input / Output					
Max. radial force on output shaft f)		$F_{r max}$	[N]	Center of output shaft: 9 950 / End of output shaft: 6 700					
Max. axial force on output shaft f)		$F_{a max}$	[N]	10 300					
Color				Red RAL 3003					
Inertia in kg.cm² h)	Ø14	J_1	[kgcm²]	7.12	6.86	6.63	5.29	4.15	3.48
	Ø19			7.12	6.86	6.63	5.29	4.15	3.48
	Ø24			8.13	7.87	7.64	6.30	5.16	4.49
	Ø32			10.33	10.07	9.84	8.50	7.36	6.69
	Ø35			13.16	12.90	12.67	11.33	10.19	9.52
	Ø38			18.35	18.09	17.86	16.52	15.38	14.71
	Ø42			17.95	17.69	17.46	16.12	14.98	14.31

a) Nominal output torque when operating at n_{1N}.
b) 1000 cycles per hour max.
c) Valid for an ambient temperature of 20°C and T_{2N}. At higher ambient temperatures, please reduce speed.
d) Valid 1000 times the gearbox life.
e) Valid for an input Ø of 38mm in 1-stage and 24mm in 2- and 3-stage.
f) Values for 300 rpm.
g) For other temperatures, please contact us. Nominal output torque when operating at n_{1N}.
h) Depending on the motor output shaft Ø.
i) With n_{1N}=2500 rpm no load.

T_{2B} ≤ 750 Nm

Rack

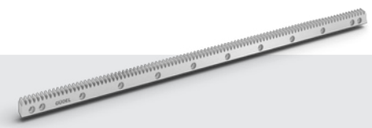

			Pinion 1	Pinion 2
Max acceleration force	F_{2B}	[N]	13 770	25 420
Max acceleration torque	T_{2B}	[Nm]	482	1 079

Above values for rack and pinion take into consideration a number of load cycles:
1×10^6 for the rack; 1×10^7 for the pinion. Both in pulsating operation.

For proper sizing follow Flowchart **Calculate your ideal Drive Train** on pages 106 et seq.

More on the Technical Datasheets **Your ideal Drive Train** on pages 94 et seq.

Input

A	for motor shaft	L ≤ 51	14 ≤ Ød ≤ 24	result in LA
B	for motor shaft	51 < L ≤ 63	24 < Ød ≤ 35	result in LB
C	for motor shaft	63 < L ≤ 83	24 < Ød ≤ 42	result in LC

		1-stage	2-stage	3-stage
LA	[mm]	143	185	227
LB	[mm]	155	197	239
LC	[mm]	175	217	

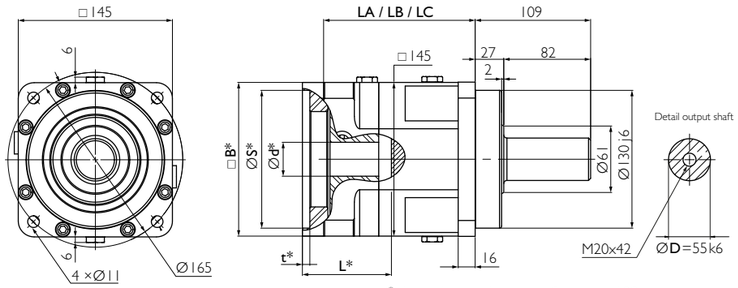

* depending on the motor. See pages 100 et seq.

Output

Standard

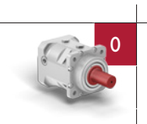

0

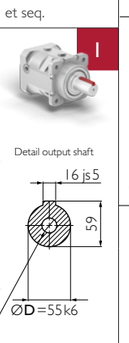

1

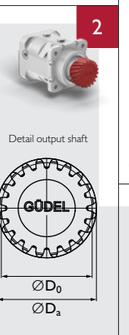

2

Option

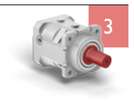

3

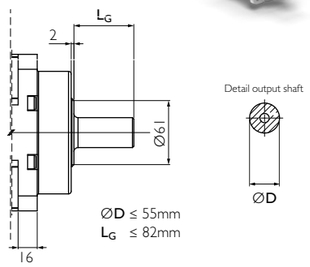

Option 3 on request. Adjustments can reduce capacity.

4

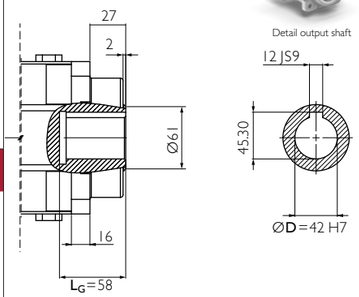

Option 4 on request. Adjustments can reduce capacity.

5

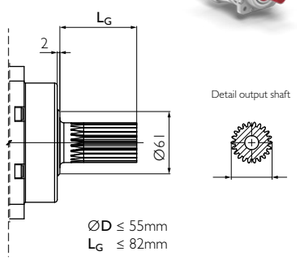

Option 5 on request. Adjustments can reduce capacity.

Example SR 140 A4, 1-stage

Your ideal Drive Train

Function Package with gearbox, rack and pinion from Güdel

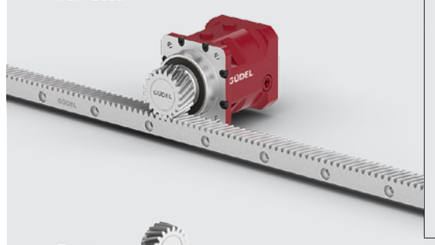

Material	16MnCr5 DIN 1.7131
Teeth	pressure angle α = 20°, helical teeth left, 19°31'42" hardened (58+4 HRC), ground, crowned
Quality	6f24 DIN 3962 / 63 / 67
f_p [mm]	Adjacent pitch error 0.006

Pinion

		m	z	A	b	B	D_a	D_0	L12	L13	x2	a
Pinion 1	[-]	3	22	61.014	30	29	76.03	70.028	69.5	56	27.5	27
Pinion 2	[-]	4	20	77.441	40	39	92.88	84.883	79	65.5	32	27

m: Module, z: Number of teeth

GÜDEL

Available ratios *			3-stage									
	i		60	80	100	112	120	140	160	200	280	400
Nominal torque S5 a)	T_{2N}	[Nm]	500	500	500	500	500	500	500	500	500	500
Acceleration torque S5 b)	T_{2B}	[Nm]	750	750	750	750	750	750	750	750	750	750
Nominal input speed S5 c)	n_{1N}	[rpm]	3 500	3 500	3 500	3 500	3 500	3 500	3 500	3 500	3 500	3 500
Maximum input speed S5	n_{1max}	[rpm]	4 000	4 000	4 000	4 000	4 000	4 000	4 000	4 000	4 000	4 000
Emergency stop torque d)	T_{2not}	[Nm]	1 300	1 300	1 300	1 300	1 300	1 300	1 300	1 300	1 300	1 300
Efficiency	η	[%]	90%									
Life duration	L_h	[h]	> 20 000									
Weight	M	[kg]	22									
Angular backlash	j_t	[arcmin]	Precision **P 1** ≤ 1 / **P 3** ≤ 3 / **P 5** ≤ 5 / **P 12** ≤12									
Torsionnal rigidity e)	C_{t2}	[Nm/arcmin]	92	92	84	86	86	92	86	92	86	86
Noise i)	L_{pA}	[dB(A)]	≤ 71									
Max. permitted housing temperature g)	T	[°C]	90									
Protection class			IP 65									
Direction of rotation			Same way Input / Output									
Max. radial force on output shaft f)	$F_{r max}$	[N]	Center of output shaft: 9 950 / End of output shaft: 6 700									
Max. axial force on output shaft f)	$F_{a max}$	[N]	10 300									
Color			Red RAL 3003									
Inertia in kg.cm² h) Ø14	J_1	[kgcm²]	5.28	5.27	3.44	4.14	3.47	4.11	3.47	3.46	3.45	3.44
Ø19			5.28	5.27	3.44	4.14	3.47	4.11	3.47	3.46	3.45	3.44
Ø24			6.29	6.28	4.45	5.15	4.48	5.12	4.48	4.47	4.46	4.45
Ø32			8.49	8.48	6.65	7.35	6.68	7.32	6.68	6.67	6.66	6.65
Ø35			11.32	11.31	9.48	10.18	9.51	10.15	9.51	9.50	9.49	9.48
Ø38			16.51	16.50	14.67	15.37	14.70	15.34	14.70	14.69	14.68	14.67
Ø42			16.11	16.10	14.27	14.97	14.30	14.94	14.30	14.29	14.28	14.27

* Other ratios available. 36, 64, 84, 180, 196, 300, 360, 500, 600, 700, 1 000 on request.

a) Nominal output torque when operating at n_{1N}.

b) 1 000 cycles per hour max.

c) Valid for an ambient temperature of 20°C and T_{2N}. At higher ambient temperatures, please reduce speed.

d) Valid 1000 times the gearbox life.

e) Valid for an input Ø of 38mm in 1-stage and 24mm in 2- and 3-stage.

f) Values for 300 rpm.

g) For other temperatures, please contact us. Nominal output torque when operating at n_{1N}.

h) Depending on the motor output shaft Ø.

i) With n_{1N}=2500 rpm no load.

3-stage 140 SR

T_{2B} ≤ 750 Nm

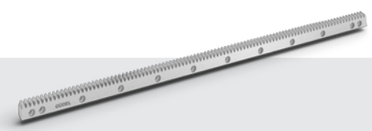

Rack

			Pinion 1	Pinion 2
Max acceleration force	F_{2B}	[N]	13 770	25 420
Max acceleration torque	T_{2B}	[Nm]	482	1 079

Above values for rack and pinion take into consideration a number of load cycles: 1×10^6 for the rack; 1×10^7 for the pinion. Both in pulsating operation.

For proper sizing follow Flowchart **Calculate your ideal Drive Train** on pages 106 et seq.

More on the Technical Datasheets **Your ideal Drive Train** on pages 94 et seq.

Input

A	for motor shaft	L ≤ 51	14 ≤ Ød ≤ 24	result in LA
B	for motor shaft	51 < L ≤ 63	24 < Ød ≤ 35	result in LB
C	for motor shaft	63 < L ≤ 83	24 < Ød ≤ 42	result in LC

		1-stage	2-stage	3-stage
LA	[mm]	143	185	227
LB	[mm]	155	197	239
LC	[mm]	175	217	

Output

Standard

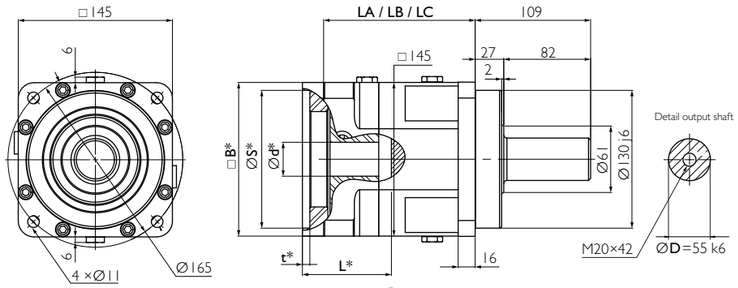

* depending on the motor. See pages 100 et seq.

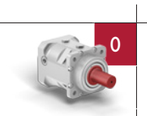

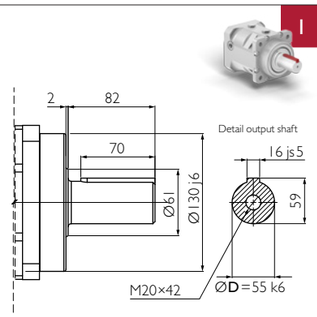

Option

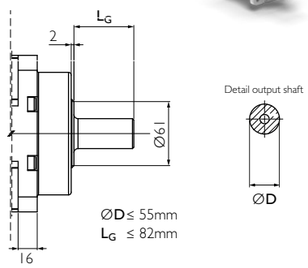

Option 3 on request. Adjustments can reduce capacity.

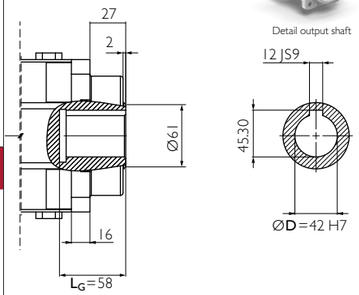

Option 4 on request. Adjustments can reduce capacity.

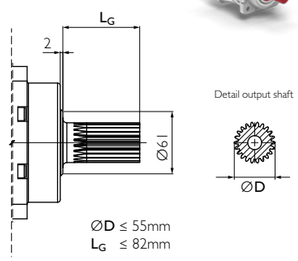

Option 5 on request. Adjustments can reduce capacity.

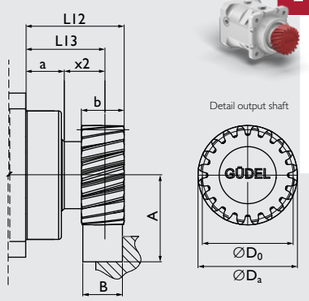

Option 2 on request. Adjustments can reduce capacity.

Material	16MnCr5 DIN 1.7131
Teeth	pressure angle α = 20°, helical teeth left, 19°31'42"
	hardened (58$^{+4}_{0}$ HRC), ground, crowned
Quality	6f24 DIN 3962 / 63 / 67
f_p [mm]	Adjacent pitch error 0.006

Example PR 140 A1, 1-stage

Your ideal Drive Train

Function Package with gearbox, rack and pinion from Güdel

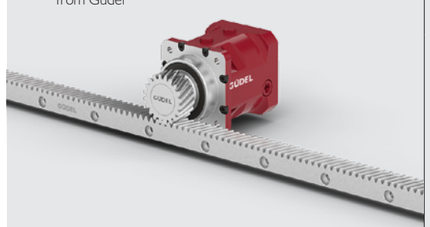

Pinion

Pinion for PR on request

GÜDEL

Available ratios		i		1-stage	2-stage				
				3	9	12	15	21	30
Nominal torque S5 a)		T_{2N}	[Nm]	700	700	700	700	700	700
Acceleration torque S5 b)		T_{2B}	[Nm]	900	900	900	900	900	900
Nominal input speed S5 c)		n_{1N}	[rpm]	1 500	1 600	2 500	2 500	2 500	2 500
Maximum input speed S5		n_{1max}	[rpm]	2 500	2 600	3 200	3 200	3 200	3 200
Emergency stop torque d)		T_{2not}	[Nm]	1 250	1 250	1 250	1 250	1 250	1 250
Efficiency		η	[%]	94%	91%				
Life duration		L_h	[h]	> 20 000					
Weight		M	[kg]	14	18				
Angular backlash		j_t	[arcmin]	Precision **P 1** ≤ 1 / **P 3** ≤ 3 / **P 5** ≤ 5 / **P 12** ≤12					
Torsionnal rigidity e)		C_{t2}	[Nm/arcmin]	103.3	93.1	93.1	93.1	93.1	93.1
Noise i)		L_{pA}	[dB(A)]	≤ 71					
Max. permitted housing temperature g)		T	[°C]	90					
Protection class				IP 65					
Direction of rotation				Same way Input / Output					
Max. radial force on output shaft f)		$F_{r max}$	[N]	Center of output shaft: 9 950 / End of output shaft: 6 700					
Max. axial force on output shaft f)		$F_{a max}$	[N]	10 300					
Color				Red RAL 3003					
Inertia in kg.cm² h)	Ø14	J_1	[kgcm²]	10.98	10.53	6.86	5.44	4.23	3.52
	Ø19			10.98	10.53	6.86	5.44	4.23	3.52
	Ø24			11.99	11.54	7.87	6.45	5.24	4.53
	Ø32			14.19	13.74	10.07	8.65	7.44	6.73
	Ø35			17.02	16.57	12.90	11.48	10.27	9.56
	Ø38			22.21	21.76	18.09	16.67	15.46	14.75
	Ø42			21.81	21.36	17.69	16.27	15.06	14.35

a) Nominal output torque when operating at n_{1N}.
b) 1000 cycles per hour max.
c) Valid for an ambient temperature of 20°C and T_{2N}. At higher ambient temperatures, please reduce speed.
d) Valid 1000 times the gearbox life.
e) Valid for an input Ø of 38mm in 1-stage and 24mm in 2- and 3-stage.
f) Values for 300 rpm.
g) For other temperatures, please contact us. Nominal output torque when operating at n_{1N}.
h) Depending on the motor output shaft Ø.
i) Wwith n_{1N}=2500 rpm no load.

T_{2B} ≤ 900 Nm

Rack

Rack for PR on request

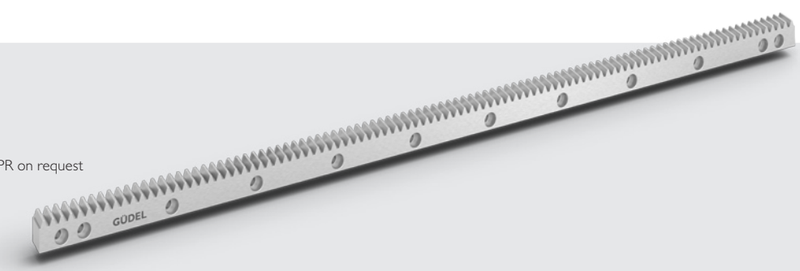

For proper sizing follow Flowchart **Calculate your ideal Drive Train** on pages 106 et seq.

More on the Technical Datasheets **Your ideal Drive Train** on pages 94 et seq.

Input

A	for motor shaft	L ≤ 51	14 ≤ Ød ≤ 24	result in LA
B	for motor shaft	51 < L ≤ 63	24 < Ød ≤ 35	result in LB
C	for motor shaft	63 < L ≤ 83	24 < Ød ≤ 42	result in LC

Output

Standard

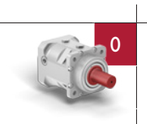

		1-stage	2-stage	3-stage
LA	[mm]	143	185	227
LB	[mm]	155	197	239
LC	[mm]	175	217	

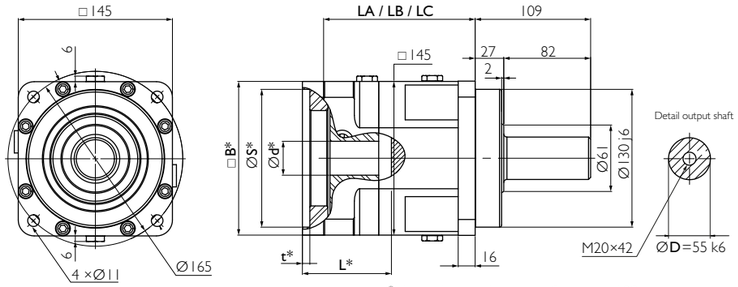

* depending on the motor. See pages 100 et seq.

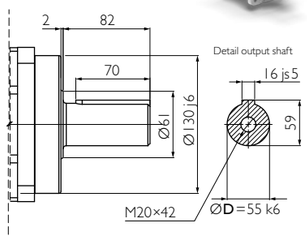

Option

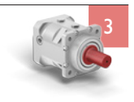

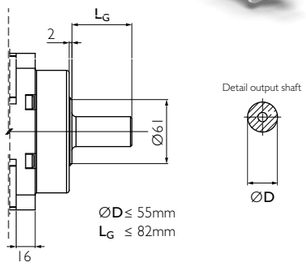

Option 3 on request. Adjustments can reduce capacity.

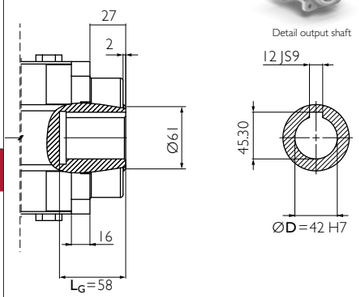

Option 4 on request. Adjustments can reduce capacity.

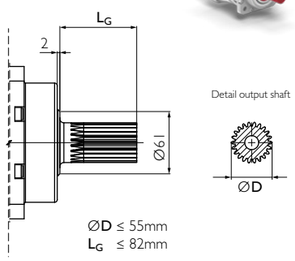

Option 5 on request. Adjustments can reduce capacity.

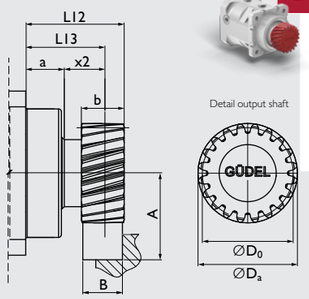

Option 2 on request. Adjustments can reduce capacity.

Material	16MnCr5 DIN 1.7131
Teeth	pressure angle α = 20°, helical teeth left, 19°31'42" hardened (58+4 0 HRC), ground, crowned
Quality	6f24 DIN 3962 / 63 / 67
f_p [mm]	Adjacent pitch error 0.006

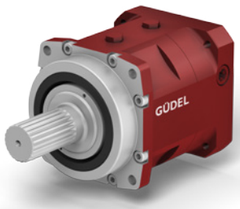

Example PR 140 A5, 1-stage

Your ideal Drive Train

Function Package with gearbox, rack and pinion from Güdel

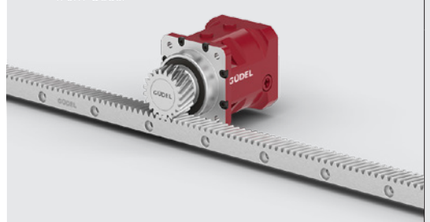

Pinion

Pinion for PR on request

Available ratios *		i		3-stage									
				36	45	60	75	90	105	120	150	210	300
Nominal torque S5 a)		T_{2N}	[Nm]	700	700	700	700	700	700	700	700	700	700
Acceleration torque S5 b)		T_{2B}	[Nm]	900	900	900	900	900	900	900	900	900	900
Nominal input speed S5 c)		n_{1N}	[rpm]	2 200	2 900	2 900	3 500	3 500	3 500	3 500	3 500	3 500	3 500
Maximum input speed S5		n_{1max}	[rpm]	4 000	4 000	4 000	4 000	4 200	4 200	4 200	4 200	4 200	4 200
Emergency stop torque d)		T_{2not}	[Nm]	1 250	1 250	1 250	1 250	1 250	1 250	1 250	1 250	1 250	1 250
Efficiency		η	[%]	88%									
Life duration		L_h	[h]	> 20 000									
Weight		M	[kg]	22									
Angular backlash		j_t	[arcmin]	Precision **P 1** ≤ 1 / **P 3** ≤ 3 / **P 5** ≤ 5 / **P 12** ≤12									
Torsionnal rigidity e)		C_{t2}	[Nm/arcmin]	83.8	83.8	100.4	100.4	83.8	100.4	94.3	100.4	98.6	83.8
Noise i)		L_{pA}	[dB(A)]	≤ 71									
Max. permitted housing temperature g)		T	[°C]	90									
Protection class				IP 65									
Direction of rotation				Same way Input / Output									
Max. radial force on output shaft f)		$F_{r max}$	[N]	Center of output shaft: 9 950 / End of output shaft: 6 700									
Max. axial force on output shaft f)		$F_{a max}$	[N]	10 300									
Color				Red RAL 3003									
Inertia in kg.cm² h)	Ø14	J_1	[kgcm²]	6.83	5.42	5.28	5.22	3.51	4.11	3.47	3.46	3.46	3.44
	Ø19			6.83	5.42	5.28	5.22	3.51	4.11	3.47	3.46	3.46	3.44
	Ø24			7.84	6.43	6.29	6.23	4.52	5.12	4.48	4.47	4.47	4.45
	Ø32			10.04	8.63	8.49	8.43	6.72	7.32	6.68	6.67	6.67	6.65
	Ø35			12.87	11.46	11.32	11.26	9.55	10.15	9.51	9.50	9.50	9.48
	Ø38			18.06	16.65	16.51	16.45	14.74	15.34	14.70	14.69	14.69	14.67
	Ø42			17.66	16.25	16.11	16.05	14.34	14.94	14.30	14.29	14.29	14.27

* Other ratios available. 27, 48, 63, 84, 147 on request.
a) Nominal output torque when operating at n_{1N}.
b) 1000 cycles per hour max.
c) Valid for an ambient temperature of 20°C and T_{2N}. At higher ambient temperatures, please reduce speed.
d) Valid 1000 times the gearbox life.
e) Valid for an input Ø of 38mm in 1-stage and 24mm in 2- and 3-stage.
f) Values for 300 rpm.
g) For other temperatures, please contact us. Nominal output torque when operating at n_{1N}.
h) Depending on the motor output shaft Ø.
i) With n_{1N}=2500 rpm no load.

T_{2B} ≤ 900 Nm

Rack

Rack for PR on request

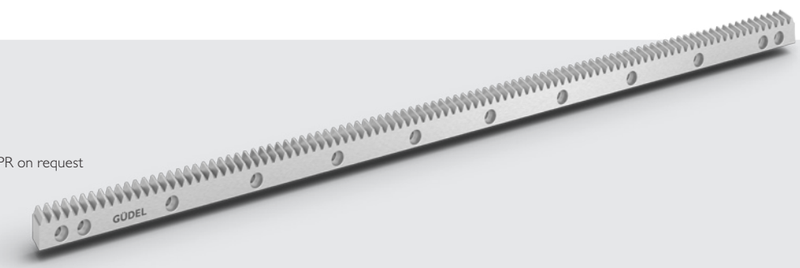

For proper sizing follow Flowchart **Calculate your ideal Drive Train** on pages 106 et seq.

More on the Technical Datasheets **Your ideal Drive Train** on pages 94 et seq.

Input

A	for motor shaft	L ≤ 60	19 ≤ Ød ≤ 32	result in LA
B	for motor shaft	60 < L ≤ 85	32 < Ød ≤ 48	result in LB
C	for motor shaft	85 < L ≤ 111	32 < Ød ≤ 48	result in LC

Output

Standard

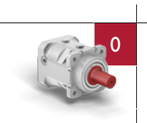

		1-stage	2-stage	3-stage
LA	[mm]	168	220	273
LB	[mm]	193	246	298
LC	[mm]	219	272	

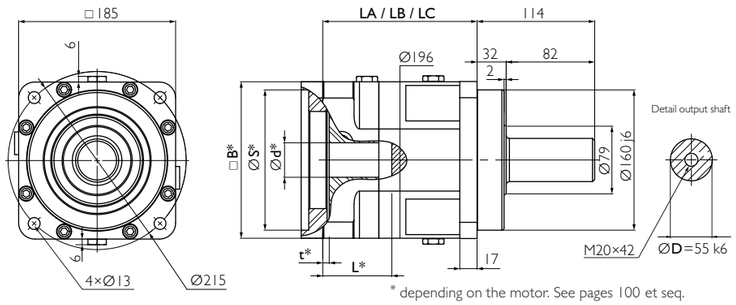

* depending on the motor. See pages 100 et seq.

Option

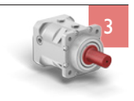

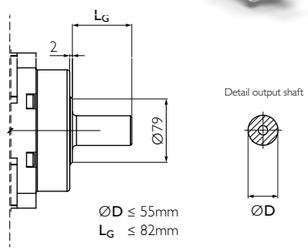

Option 3 on request. Adjustments can reduce capacity.

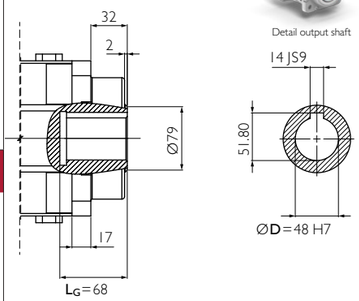

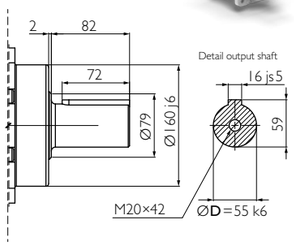

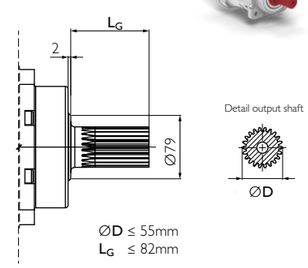

Option 5 on request. Adjustments can reduce capacity.

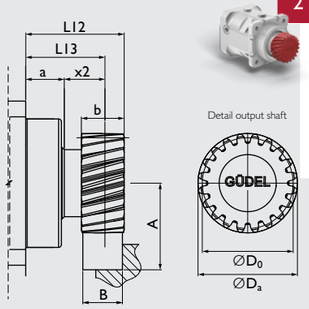

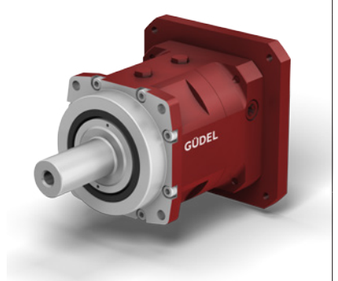

Example NR 180 C0, 1-stage

Your ideal Drive Train

Function Package with gearbox, rack and pinion from Güdel

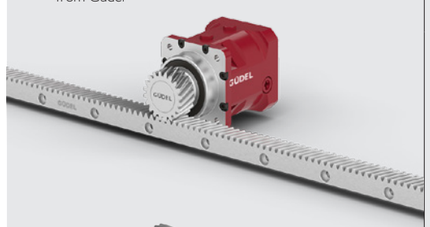

Material	16MnCr5 DIN 1.7131
Teeth	pressure angle α = 20°, helical teeth left, 19°31'42" hardened (58^{+4}_{0} HRC), ground, crowned
Quality	6f24 DIN 3962 / 63 / 67
f_p [mm]	Adjacent pitch error 0.006

Pinion

		m	z	A	b	B	D_a	D_0	L12	L13	x2	a
Pinion 1	[-]	4	20	77.441	40	39	92.88	84.883	83.5	67.5	31.5	32
Pinion 2	[-]	5	20	87.052	50	49	116.1	106.103	89.5	64.5	32.5	32

m: Module, z: Number of teeth

GÜDEL

Available ratios		i		1-stage 3	4	5	7	10
Nominal torque S5 a)		T_{2N}	[Nm]	750	770	780	760	680
Acceleration torque S5 b)		T_{2B}	[Nm]	1 150	1 150	1 150	1 150	880
Nominal input speed S5 c)		n_{1N}	[rpm]	1 500	1 500	1 500	2 300	2 300
Maximum input speed S5		n_{1max}	[rpm]	3 000	3 500	3 500	3 500	3 500
Nominal torque S1 a)		T_{2N}	[Nm]	380	380	380	380	340
Acceleration torque S1 b)		T_{2B}	[Nm]	560	560	560	560	570
Nominal input speed S1 c)		n_{1N}	[rpm]	1 100	1 300	1 300	2 100	2 100
Maximum input speed S1		n_{1max}	[rpm]	1 500	1 500	1 500	2 300	2 300
Emergency stop torque d)		T_{2not}	[Nm]	2 550	2 780	2 780	2 780	2 250
Efficiency		η	[%]	97%				
Life duration		L_h	[h]	> 20 000				
Weight		M	[kg]	32				
Angular backlash		j_t	[arcmin]	Precision **P 1** ≤ 1 / **P 3** ≤ 3 / **P 5** ≤ 5 / **P 12** ≤12				
Torsionnal rigidity e)		C_{t2}	[Nm/arcmin]	156.3	182.7	193.5	210.1	183.3
Noise i)		L_{pA}	[dB(A)]	≤ 71				
Max. permitted housing temperature g)		T	[°C]	90				
Protection class				IP 65				
Direction of rotation				Same way Input / Output				
Max. radial force on output shaft f)		$F_{r\,max}$	[N]	Center of output shaft: 15 500 / End of output shaft: 11 500				
Max. axial force on output shaft f)		$F_{a\,max}$	[N]	15 000				
Color				Red RAL 3 003				
Inertia in kg.cm² h)	Ø19	J_1	[kgcm²]	38.19	23.35	17.21	12.12	9.18
	Ø24			39.24	24.40	18.26	13.17	10.23
	Ø32			41.45	26.61	20.47	15.38	12.44
	Ø35			44.37	29.53	23.39	18.30	15.36
	Ø38			49.97	35.13	28.99	23.90	20.96
	Ø42			49.47	34.63	28.49	23.40	20.46
	Ø48			49.87	35.03	28.89	23.80	20.86

a) Nominal output torque when operating at n_{1N}.
b) 1000 cycles per hour max.
c) Valid for an ambient temperature of 20°C and T_{2N}. At higher ambient temperatures, please reduce speed.
d) Valid 1000 times the gearbox life.
e) Valid for an input Ø of 48mm in 1-stage and 38mm in 2- and 3-stage.
f) Values for 300 rpm.
g) For other temperatures, please contact us. Nominal output torque when operating at n_{1N}.
h) Depending on the motor output shaft Ø.
i) With i=10 and n_{1N}=3000 rpm no load.

Rack

			Pinion 1	Pinion 2
Max acceleration force	F_{2B}	[N]	25 420	40 680
Max acceleration torque	T_{2B}	[Nm]	1 079	2 158

Above values for rack and pinion take into consideration a number of load cycles: 1×10^6 for the rack; 1×10^7 for the pinion. Both in pulsating operation.

For proper sizing follow Flowchart **Calculate your ideal Drive Train** on pages 106 et seq.

More on the Technical Datasheets **Your ideal Drive Train** on pages 94 et seq.

Input

A	for motor shaft	L ≤ 60	19 ≤ Ød ≤ 32	result in LA
B	for motor shaft	60 < L ≤ 85	32 < Ød ≤ 48	result in LB
C	for motor shaft	85 < L ≤ 111	32 < Ød ≤ 48	result in LC

Output

Standard

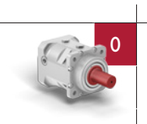

		1-stage	2-stage	3-stage
LA	[mm]	168	220	273
LB	[mm]	193	246	298
LC	[mm]	219	272	

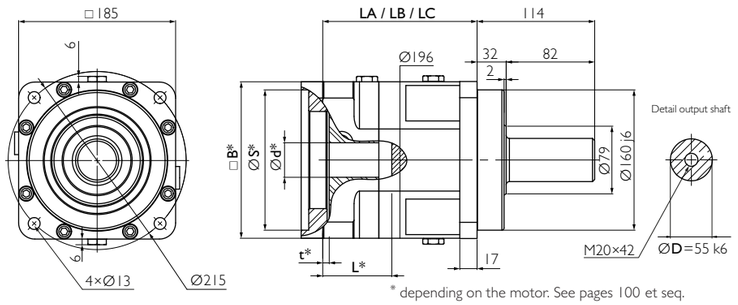

* depending on the motor. See pages 100 et seq.

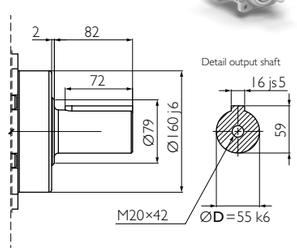

Option

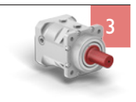

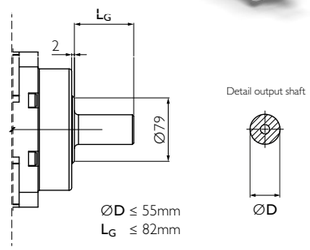

Option 3 on request. Adjustments can reduce capacity.

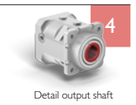

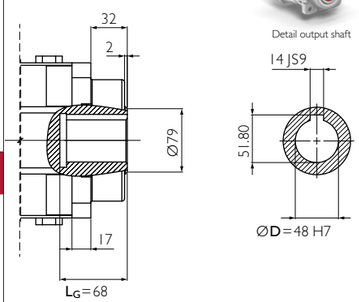

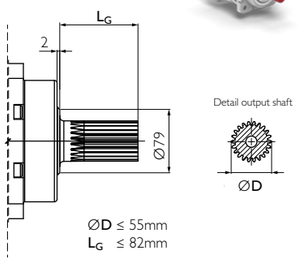

Option 5 on request. Adjustments can reduce capacity.

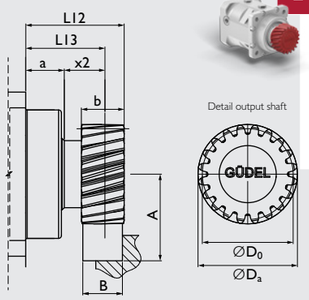

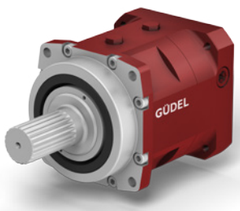

Example NR 180 A5, 1-stage

Your ideal Drive Train

Function Package with gearbox, rack and pinion from Güdel

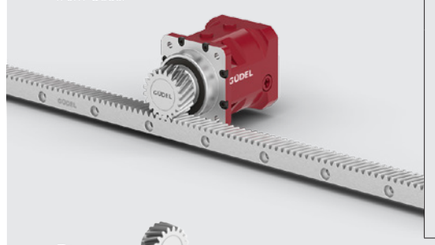

Material 16MnCr5 DIN 1.7131
Teeth pressure angle α = 20°, helical teeth left, 19°31'42"
hardened (58$^{+4}_{0}$ HRC), ground, crowned
Quality 6f24 DIN 3962 / 63 / 67
f_p [mm] Adjacent pitch error 0.006

Pinion

		m	z	A	b	B	D_a	D_0	L12	L13	x2	a
Pinion 1	[-]	4	20	77.441	40	39	92.88	84.883	83.5	67.5	31.5	32
Pinion 2	[-]	5	20	87.052	50	49	116.1	106.103	89.5	64.5	32.5	32

m: Module, z: Number of teeth

GÜDEL

Available ratios *		i		2-stage 12	16	20	25	30	35	40	50	70	100
Nominal torque S5 a)		T_{2N}	[Nm]	750	770	780	780	750	780	770	780	760	680
Acceleration torque S5 b)		T_{2B}	[Nm]	1 150	1 150	1 150	1 150	1 150	1 150	1 150	1 150	1 150	880
Nominal input speed S5 c)		n_{1N}	[rpm]	2 500	2 700	2 700	2 700	2 700	2 700	2 700	2 900	2 900	3 400
Maximum input speed S5		n_{1max}	[rpm]	3 800	3 800	3 800	3 800	3 800	3 800	3 800	3 800	3 800	3 800
Nominal torque S1 a)		T_{2N}	[Nm]	380	380	380	380	380	380	380	380	380	340
Acceleration torque S1 b)		T_{2B}	[Nm]	560	560	560	560	560	560	560	560	570	570
Nominal input speed S1 c)		n_{1N}	[rpm]	1 700	2 400	2 400	2 400	2 400	2 400	2 400	2 600	2 600	3 000
Maximum input speed S1		n_{1max}	[rpm]	2 500	2 700	2 700	2 700	2 700	2 700	2 700	2 900	2 900	3 400
Emergency stop torque d)		T_{2not}	[Nm]	2 780	2 780	2 780	2 780	2 550	2 780	2 780	2 780	2 780	2 250
Efficiency		η	[%]	94%									
Life duration		L_h	[h]	> 20 000									
Weight		M	[kg]	39									
Angular backlash		j_t	[arcmin]	Precision **P 1** ≤ 1 / **P 3** ≤ 3 / **P 5** ≤ 5 / **P 12** ≤12									
Torsionnal rigidity e)		C_{t2}	[Nm/arcmin]	140.6	164.4	174.0	174.0	140.6	174.0	164.4	174.0	189.2	165.0
Noise i)		L_{pA}	[dB(A)]	≤ 71									
Max. permitted housing temperature g)		T	[°C]	90									
Protection class				IP 65									
Direction of rotation				Same way Input / Output									
Max. radial force on output shaft f)		$F_{r\,max}$	[N]	Center of output shaft: 15 500 / End of output shaft: 11 500									
Max. axial force on output shaft f)		$F_{a\,max}$	[N]	15 000									
Color				Red RAL 3003									
Inertia in kg.cm² h)	Ø19	J_1	[kgcm²]	23.57	22.65	16.76	16.51	9.22	11.77	9.07	9.01	8.96	8.93
	Ø24			24.62	23.7	17.81	17.56	10.27	12.82	10.12	10.06	10.01	9.98
	Ø32			26.83	25.91	20.02	19.77	12.48	15.03	12.33	12.27	12.22	12.19
	Ø35			29.75	28.83	22.94	22.69	15.4	17.95	15.25	15.19	15.14	15.11
	Ø38			35.35	34.43	28.54	28.29	21	23.55	20.85	20.79	20.74	20.71
	Ø42			34.85	33.93	28.04	27.79	20.5	23.05	20.35	20.29	20.24	20.21
	Ø48			35.25	34.33	28.44	28.19	20.9	23.45	20.75	20.69	20.64	20.61

* Other ratios available. 9, 15, 21, 27, 28, 49 on request.
a) Nominal output torque when operating at n_{1N}.
b) 1000 cycles per hour max.
c) Valid for an ambient temperature of 20°C and T_{2N}. At higher ambient temperatures, please reduce speed.
d) Valid 1000 times the gearbox life.
e) Valid for an input Ø of 48mm in 1-stage and 38mm in 2- and 3-stage.
f) Values for 300 rpm.
g) For other temperatures, please contact us. Nominal output torque when operating at n_{1N}.
h) Depending on the motor output shaft Ø.
i) With i=10 and n_{1N}=3000 rpm no load.

Rack

			Pinion 1	Pinion 2
Max acceleration force	F_{2B}	[N]	25 420	40 680
Max acceleration torque	T_{2B}	[Nm]	1 079	2 158

Above values for rack and pinion take into consideration a number of load cycles: 1×10^6 for the rack; 1×10^7 for the pinion. Both in pulsating operation.

For proper sizing follow Flowchart **Calculate your ideal Drive Train** on pages 106 et seq.

More on the Technical Datasheets **Your ideal Drive Train** on pages 94 et seq.

Input

A	for motor shaft	L ≤ 60	19 ≤ Ød ≤ 32	result in LA
B	for motor shaft	60 < L ≤ 85	32 < Ød ≤ 48	result in LB
C	for motor shaft	85 < L ≤ 111	32 < Ød ≤ 48	result in LC

Output

Standard

		1-stage	2-stage	3-stage
LA	[mm]	168	220	273
LB	[mm]	193	246	298
LC	[mm]	219	272	

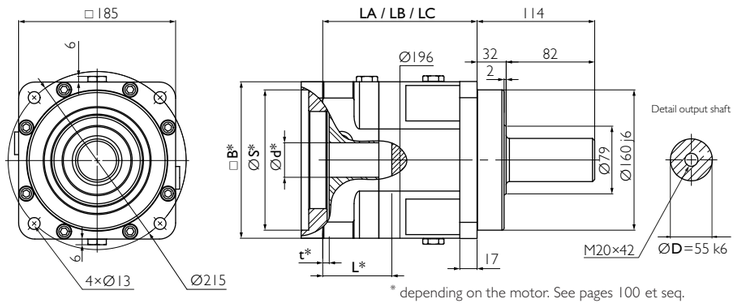

* depending on the motor. See pages 100 et seq.

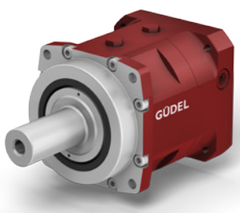

Example NR 180 A0, 1-stage

Option

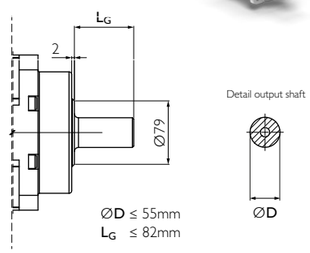

Option 3 on request. Adjustments can reduce capacity.

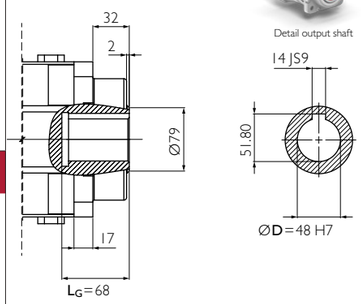

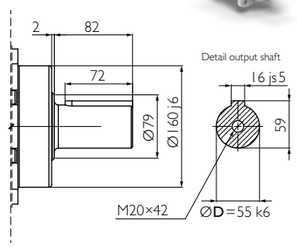

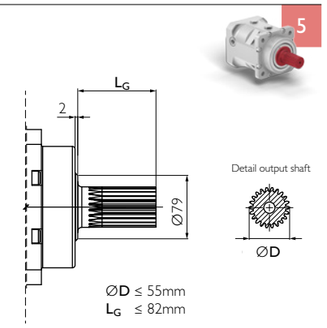

Option 5 on request. Adjustments can reduce capacity.

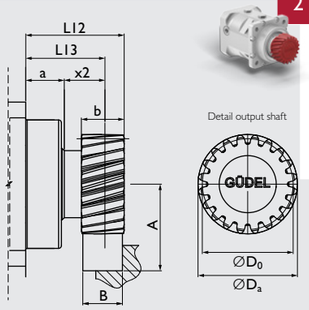

Material 16MnCr5 DIN 1.7131
Teeth pressure angle α = 20°, helical teeth left, 19°31'42"
hardened (58+4 0 HRC), ground, crowned
Quality 6f24 DIN 3962 / 63 / 67
f_p [mm] Adjacent pitch error 0.006

Your ideal Drive Train

Function Package with gearbox, rack and pinion from Güdel

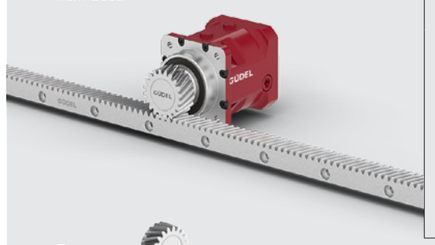

Pinion

		m	z	A	b	B	D_a	D_0	L12	L13	x2	a
Pinion 1	[-]	4	20	77.441	40	39	92.88	84.883	83.5	67.5	31.5	32
Pinion 2	[-]	5	20	87.052	50	49	116.1	106.103	89.5	64.5	32.5	32

m: Module, z: Number of teeth

Available ratios *		i		3-stage 105	125	175	200	250	300	400	500	700	1 000
Nominal torque S5 a)		T_{2N}	[Nm]	780	780	780	780	780	750	770	780	760	680
Acceleration torque S5 b)		T_{2B}	[Nm]	1 150	1 150	1 150	1 150	1 150	1 150	1 150	1 150	1 150	880
Nominal input speed S5 c)		n_{1N}	[rpm]	3 400	3 400	3 400	3 400	3 400	3 400	3 400	3 400	3 400	3 400
Maximum input speed S5		n_{1max}	[rpm]	4 000	4 000	4 000	4 000	4 000	4 000	4 000	4 000	4 000	4 000
Nominal torque S1 a)		T_{2N}	[Nm]	400	400	400	400	400	400	400	400	400	340
Acceleration torque S1 b)		T_{2B}	[Nm]	570	570	570	570	570	570	570	570	570	570
Nominal input speed S1 c)		n_{1N}	[rpm]	3 000	3 000	3 000	3 000	3 000	3 000	3 000	3 000	3 000	3 000
Maximum input speed S1		n_{1max}	[rpm]	3 400	3 400	3 400	3 400	3 400	3 400	3 400	3 400	3 400	3 400
Emergency stop torque d)		T_{2not}	[Nm]	2 780	2 780	2 780	2 780	2 780	2 550	2 780	2 780	2 780	2 250
Efficiency		η	[%]	91%									
Life duration		L_h	[h]	> 20 000									
Weight		M	[kg]	46									
Angular backlash		j_t	[arcmin]	Precision **P 1** ≤ 1 / **P 3** ≤ 3 / **P 5** ≤ 5 / **P 12** ≤12									
Torsionnal rigidity e)		C_{t2}	[Nm/arcmin]	165.3	165.3	165.5	133.3	165.3	133.3	156.3	165.3	179.5	156.6
Noise i)		L_{pA}	[dB(A)]	≤ 71									
Max. permitted housing temperature g)		T	[°C]	90									
Protection class				IP 65									
Direction of rotation				Same way Input / Output									
Max. radial force on output shaft f)		$F_{r\,max}$	[N]	Center of output shaft: 15 500 / End of output shaft: 11 500									
Max. axial force on output shaft f)		$F_{a\,max}$	[N]	15 000									
Color				Red RAL 3003									
Inertia in kg.cm² h)	Ø19	J_1	[kgcm²]	11.77	16.48	11.77	9.00	9.00	8.93	8.93	8.93	8.93	8.93
	Ø24			12.82	17.53	12.82	10.05	10.05	9.98	9.98	9.98	9.98	9.98
	Ø32			15.03	19.74	15.03	12.26	12.26	12.19	12.19	12.19	12.19	12.19
	Ø35			17.95	22.66	17.95	15.18	15.18	15.11	15.11	15.11	15.11	15.11
	Ø38			23.55	28.26	23.55	20.78	20.78	20.71	20.71	20.71	20.71	20.71
	Ø42			23.05	27.76	23.05	20.28	20.28	20.21	20.21	20.21	20.21	20.21
	Ø48			23.45	28.16	23.45	20.68	20.68	20.61	20.61	20.61	20.61	20.61

* Other ratios available. 112, 120, 140, 147, 150, 160, 196, 210, 245, 280, 343, 350, 490 on request.
a) Nominal output torque when operating at n_{1N}.
b) 1000 cycles per hour max.
c) Valid for an ambient temperature of 20°C and T_{2N}. At higher ambient temperatures, please reduce speed.
d) Valid 1000 times the gearbox life.
e) Valid for an input Ø of 48mm in 1-stage and 38mm in 2- and 3-stage.
f) Values for 300 rpm.
g) For other temperatures, please contact us. Nominal output torque when operating at n_{1N}.
h) Depending on the motor output shaft Ø.
i) With i=10 and n_{1N}=3000 rpm no load.

Rack

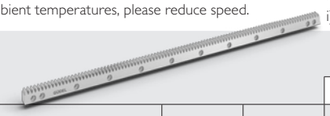

			Pinion 1	Pinion 2
Max acceleration force	F_{2B}	[N]	25 420	40 680
Max acceleration torque	T_{2B}	[Nm]	1 079	2 158

Above values for rack and pinion take into consideration a number of load cycles: 1×10^6 for the rack; 1×10^7 for the pinion. Both in pulsating operation.

For proper sizing follow Flowchart **Calculate your ideal Drive Train** on pages 106 et seq.

More on the Technical Datasheets **Your ideal Drive Train** on pages 94 et seq.

T_{2B} ≤ 1150 Nm

Input

A	for motor shaft	L ≤ 60	19 ≤ Ød ≤ 32	result in LA
B	for motor shaft	60 < L ≤ 85	32 < Ød ≤ 48	result in LB
C	for motor shaft	85 < L ≤ 111	32 < Ød ≤ 48	result in LC

Output

Standard

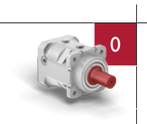

		1-stage	2-stage	3-stage
LA	[mm]	168	220	273
LB	[mm]	193	246	298
LC	[mm]	219	272	

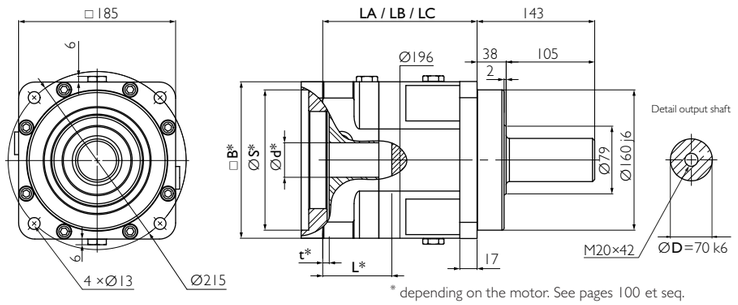

* depending on the motor. See pages 100 et seq.

Example SR 180 A2, 1-stage

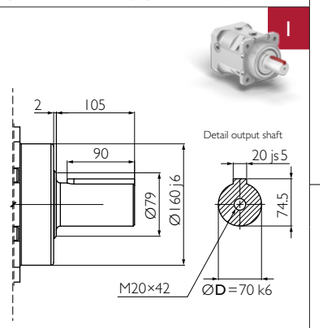

Option

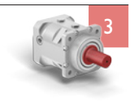

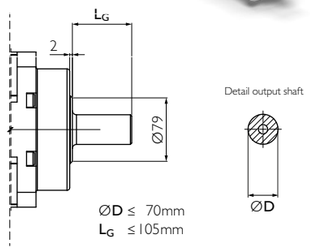

Option 3 on request. Adjustments can reduce capacity.

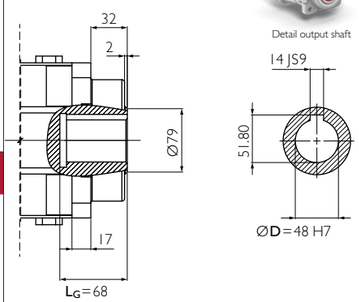

Option 4 on request. Adjustments can reduce capacity.

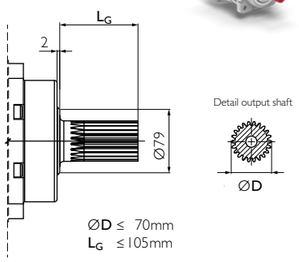

Option 5 on request. Adjustments can reduce capacity.

Your ideal Drive Train

Function Package with gearbox, rack and pinion from Güdel

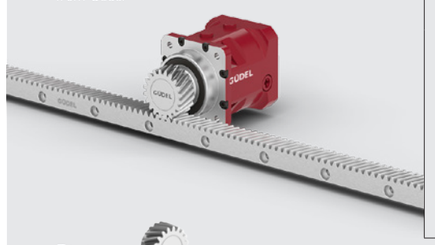

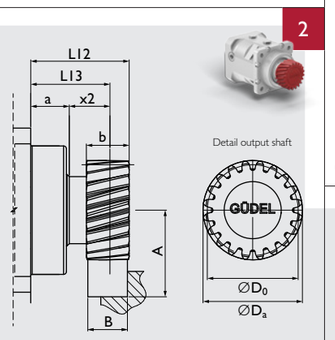

Material	16MnCr5 DIN 1.7131
Teeth	pressure angle α = 20°, helical teeth left, 19°31'42" hardened (58+4 0 HRC), ground, crowned
Quality	6f24 DIN 3962 / 63 / 67
f_p [mm]	Adjacent pitch error 0.006

Pinion

		m	z	A	b	B	D_a	D_0	L12	L13	x2	a
Pinion 1	[-]	4	20	77.441	40	39	92.88	84.883	89.5	69.5	31.5	38
Pinion 2	[-]	5	20	87.052	50	49	116.1	106.103	95.5	70.5	32.5	38

m: Module, z: Number of teeth

GÜDEL

Available ratios		i		1-stage	2-stage				
				4	12	16	20	28	40
Nominal torque S5 a)		T_{2N}	[Nm]	1 100	1 100	1 100	1 100	1 100	1 100
Acceleration torque S5 b)		T_{2B}	[Nm]	1 500	1 500	1 500	1 500	1 500	1 500
Nominal input speed S5 c)		n_{1N}	[rpm]	1 300	2 200	2 400	2 400	2 400	2 400
Maximum input speed S5		n_{1max}	[rpm]	3 100	3 600	3 600	3 600	3 600	3 600
Emergency stop torque d)		T_{2not}	[Nm]	2 780	2 780	2 780	2 780	2 780	2 780
Efficiency		η	[%]	96%	93%				
Life duration		L_h	[h]	> 20 000					
Weight		M	[kg]	32	39				
Angular backlash		j_t	[arcmin]	Precision **P 1** ≤ 1 / **P 3** ≤ 3 / **P 5** ≤ 5 / **P 12** ≤12					
Torsionnal rigidity e)		C_{t2}	[Nm/arcmin]	191.8	147.5	172.5	182.7	172.5	172.5
Noise i)		L_{pA}	[dB(A)]	≤ 72					
Max. permitted housing temperature g)		T	[°C]	90					
Protection class				IP 65					
Direction of rotation				Same way Input / Output					
Max. radial force on output shaft f)		$F_{r max}$	[N]	Center of output shaft: 18 000 / End of output shaft: 13 000					
Max. axial force on output shaft f)		$F_{a max}$	[N]	15 000					
Color				Red RAL 3003					
Inertia in kg.cm² h)	Ø19	J_1	[kgcm²]	23.35	23.57	22.65	16.76	11.90	9.07
	Ø24			24.40	24.62	23.70	17.81	12.95	10.12
	Ø32			26.61	26.83	25.91	20.02	15.16	12.33
	Ø35			29.53	29.75	28.83	22.94	18.08	15.25
	Ø38			35.13	35.35	34.43	28.54	23.68	20.85
	Ø42			34.63	34.85	33.93	28.04	23.18	20.35
	Ø48			35.03	35.25	34.33	28.44	23.58	20.75

a) Nominal output torque when operating at n_{1N}.
b) 1000 cycles per hour max.
c) Valid for an ambient temperature of 20°C and T_{2N}. At higher ambient temperatures, please reduce speed.
d) Valid 1000 times the gearbox life.
e) Valid for an input Ø of 48mm in 1-stage and 38mm in 2- and 3-stage.
f) Values for 300 rpm.
g) For other temperatures, please contact us. Nominal output torque when operating at n_{1N}.
h) Depending on the motor output shaft Ø.
i) With n_{1N}=2500 rpm no load.

Rack

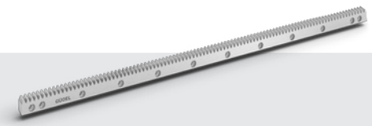

			Pinion 1	Pinion 2
Max acceleration force	F_{2B}	[N]	25 420	40 680
Max acceleration torque	T_{2B}	[Nm]	1 079	2 158

Above values for rack and pinion take into consideration a number of load cycles: 1×10^6 for the rack; 1×10^7 for the pinion. Both in pulsating operation.

For proper sizing follow Flowchart **Calculate your ideal Drive Train** on pages 106 et seq.

More on the Technical Datasheets **Your ideal Drive Train** on pages 94 et seq.

Input

A	for motor shaft	L ≤ 60	19 ≤ Ød ≤ 32	result in LA
B	for motor shaft	60 < L ≤ 85	32 < Ød ≤ 48	result in LB
C	for motor shaft	85 < L ≤ 111	32 < Ød ≤ 48	result in LC

Output

Standard

		1-stage	2-stage	3-stage
LA	[mm]	168	220	273
LB	[mm]	193	246	298
LC	[mm]	219	272	

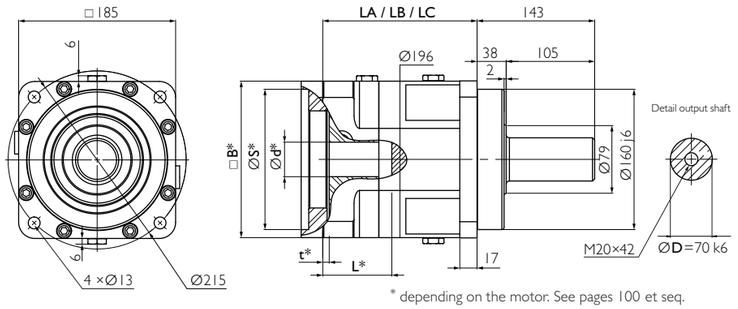

* depending on the motor. See pages 100 et seq.

0

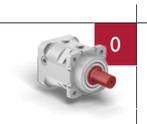

1

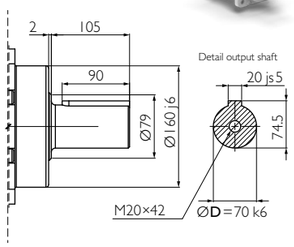

2

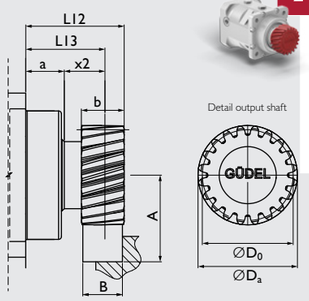

3

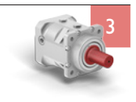

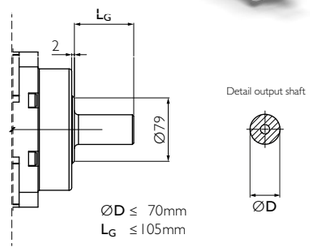

Option 3 on request. Adjustments can reduce capacity.

4

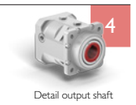

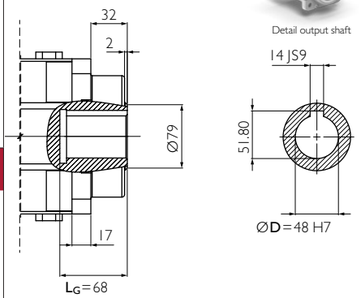

Option 4 on request. Adjustments can reduce capacity.

5

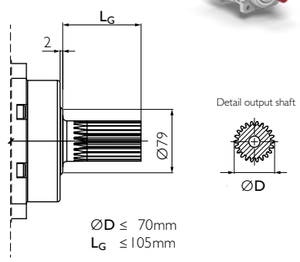

Option 5 on request. Adjustments can reduce capacity.

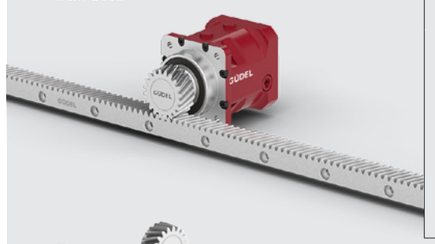

Example SR 180 A5, 1-stage

Your ideal Drive Train

Function Package with gearbox, rack and pinion from Güdel

Material	16MnCr5 DIN 1.7131
Teeth	pressure angle α = 20°, helical teeth left, 19°31'42" hardened (58$^{+4}_{0}$ HRC), ground, crowned
Quality	6f24 DIN 3962 / 63 / 67
f_p [mm]	Adjacent pitch error 0.006

Pinion

		m	z	A	b	B	D_a	D_0	L12	L13	x2	a
Pinion 1	[-]	4	20	77.441	40	39	92.88	84.883	89.5	69.5	31.5	38
Pinion 2	[-]	5	20	87.052	50	49	116.1	106.103	95.5	70.5	32.5	38

m: Module, z: Number of teeth

GÜDEL

Available ratios *			3-stage									
	i		60	80	100	112	120	140	160	200	280	400
Nominal torque S5 a)	T_{2N}	[Nm]	1 100	1 100	1 100	1 100	1 100	1 100	1 100	1 100	1 100	1 100
Acceleration torque S5 b)	T_{2B}	[Nm]	1 500	1 500	1 500	1 500	1 500	1 500	1 500	1 500	1 500	1 500
Nominal input speed S5 c)	n_{1N}	[rpm]	3 000	3 000	3 000	3 000	3 000	3 000	3 000	3 000	3 000	3 000
Maximum input speed S5	n_{1max}	[rpm]	3 600	3 600	3 600	3 600	3 600	3 600	3 600	3 600	3 600	3 600
Emergency stop torque d)	T_{2not}	[Nm]	2 780	2 780	2 780	2 780	2 780	2 780	2 780	2 780	2 780	2 780
Efficiency	η	[%]	90%									
Life duration	L_h	[h]	> 20 000									
Weight	M	[kg]	46									
Angular backlash	j_t	[arcmin]	Precision **P 1** ≤ 1 / **P 3** ≤ 3 / **P 5** ≤ 5 / **P 12** ≤12									
Torsionnal rigidity e)	C_{t2}	[Nm/arcmin]	173.4	173.4	173.1	164.1	164.1	173.4	164.1	140.0	164.1	164.1
Noise i)	L_{pA}	[dB(A)]	≤ 72									
Max. permitted housing temperature g)	T	[°C]	90									
Protection class			IP 65									
Direction of rotation			Same way Input / Output									
Max. radial force on output shaft f)	$F_{r max}$	[N]	Center of output shaft: 18 000 / End of output shaft: 13 000									
Max. axial force on output shaft f)	$F_{a max}$	[N]	15 000									
Color			Red RAL 3003									
Inertia in kg.cm² h) Ø19	J_1	[kgcm²]	16.77	16.73	8.93	11.88	9.07	11.76	9.06	9.00	8.96	8.93
Ø24			17.82	17.78	9.98	12.93	10.12	12.81	10.11	10.05	10.01	9.98
Ø32			20.03	19.99	12.19	15.14	12.33	15.02	12.32	12.26	12.22	12.19
Ø35			22.95	22.91	15.11	18.06	15.25	17.94	15.24	15.18	15.14	15.11
Ø38			28.55	28.51	20.71	23.66	20.85	23.54	20.84	20.78	20.74	20.71
Ø42			28.05	28.01	20.21	23.16	20.35	23.04	20.34	20.28	20.24	20.21
Ø48			28.45	28.41	20.61	23.56	20.75	23.44	20.74	20.68	20.64	20.61

* Other ratios available. 36, 64, 84, 180, 196, 300, 360, 500, 600, 700, 1000 on request.

a) Nominal output torque when operating at n_{1N}.

b) 1000 cycles per hour max.

c) Valid for an ambient temperature of 20°C and T_{2N}. At higher ambient temperatures, please reduce speed.

d) Valid 1000 times the gearbox life.

e) Valid for an input Ø of 48mm in 1-stage and 38mm in 2- and 3-stage.

f) Values for 300 rpm.

g) For other temperatures, please contact us. Nominal output torque when operating at n_{1N}.

h) Depending on the motor output shaft Ø.

i) With n_{1N}=2500 rpm no load.

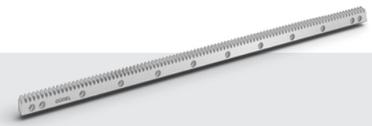

Rack

			Pinion 1	Pinion 2
Max acceleration force	F_{2B}	[N]	25 420	40 680
Max acceleration torque	T_{2B}	[Nm]	1 079	2 158

Above values for rack and pinion take into consideration a number of load cycles: 1×10^6 for the rack; 1×10^7 for the pinion. Both in pulsating operation.

For proper sizing follow Flowchart **Calculate your ideal Drive Train** on pages 106 et seq.

More on the Technical Datasheets **Your ideal Drive Train** on pages 94 et seq.

Input

A	for motor shaft	L ≤ 60	19 ≤ Ød ≤ 32 result in LA
B	for motor shaft	60 < L ≤ 85	32 < Ød ≤ 48 result in LB
C	for motor shaft	85 < L ≤ 111	32 < Ød ≤ 48 result in LC

Output

Standard

		1-stage	2-stage	3-stage
LA	[mm]	168	220	273
LB	[mm]	193	246	298
LC	[mm]	219	272	

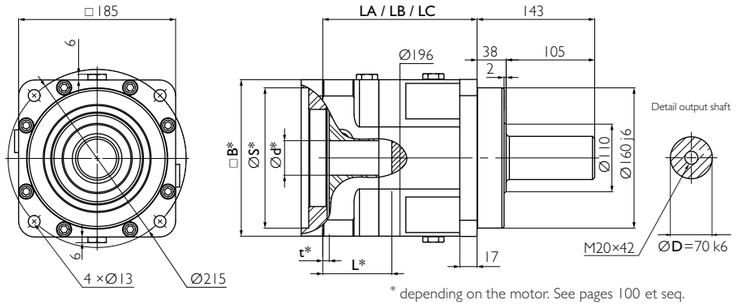

* depending on the motor. See pages 100 et seq.

0

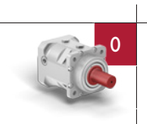

Option

3

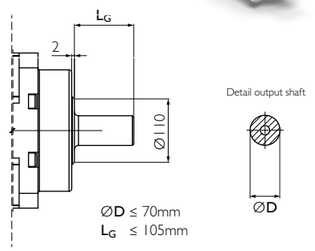

Option 3 on request. Adjustments can reduce capacity.

4

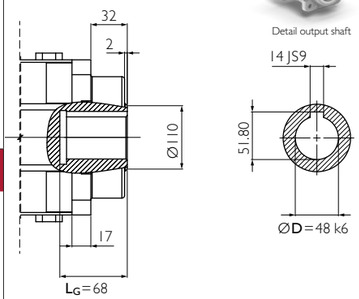

Option 4 on request. Adjustments can reduce capacity.

5

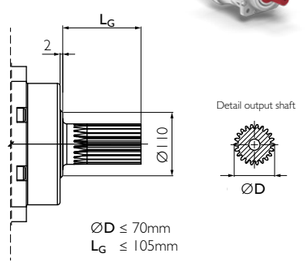

Option 5 on request. Adjustments can reduce capacity.

1

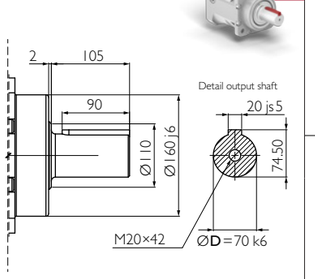

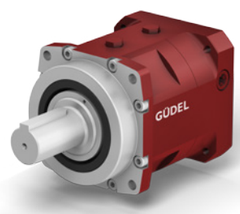

Example PR 180 A1, 1-stage

Your ideal Drive Train

Function Package with gearbox, rack and pinion from Güdel

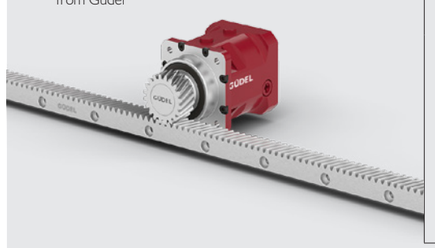

2

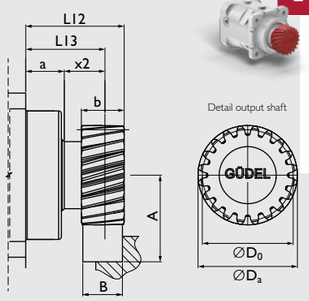

Option 2 on request. Adjustments can reduce capacity.

Material	16MnCr5 DIN 1.7131
Teeth	pressure angle α = 20°, helical teeth left, 19°31'42" hardened (58+4 0 HRC), ground, crowned
Quality	6f24 DIN 3962 / 63 / 67
f_p [mm]	Adjacent pitch error 0.006

Pinion

Pinion for PR on request

GÜDEL

Available ratios		i		1-stage	2-stage				
				3	9	12	15	21	30
Nominal torque S5 a)		T_{2N}	[Nm]	1 600	1 600	1 600	1 600	1 600	1 600
Acceleration torque S5 b)		T_{2B}	[Nm]	1 925	1 900	1 900	1 900	1 900	1 900
Nominal input speed S5 c)		n_{1N}	[rpm]	1 200	2 000	2 000	2 100	2 100	2 100
Maximum input speed S5		n_{1max}	[rpm]	2 400	2 400	3 200	3 200	3 200	3 200
Emergency stop torque d)		T_{2not}	[Nm]	3 000	3 000	3 000	3 000	3 000	3 000
Efficiency		η	[%]	94%	91%				
Life duration		L_h	[h]	> 20 000					
Weight		M	[kg]	32	39				
Angular backlash		j_t	[arcmin]	Precision **P 1** ≤ 1 / **P 3** ≤ 3 / **P 5** ≤ 5 / **P 12** ≤12					
Torsionnal rigidity e)		C_{t2}	[Nm/arcmin]	366.6	349.1	333.4	300.3	281.1	274.1
Noise i)		L_{pA}	[dB(A)]	≤ 72					
Max. permitted housing temperature g)		T	[°C]	90					
Protection class				IP 65					
Direction of rotation				Same way Input / Output					
Max. radial force on output shaft f)		$F_{r\,max}$	[N]	Center of output shaft: 18 000 / End of output shaft: 13 000					
Max. axial force on output shaft f)		$F_{a\,max}$	[N]	20 000					
Color				Red RAL 3003					
Inertia in kg.cm² h)	Ø19	J_1	[kgcm²]	38.19	38.58	16.57	17.35	12.20	9.22
	Ø24			39.24	39.63	17.62	18.40	13.25	10.27
	Ø32			41.45	41.84	19.83	20.61	15.46	12.48
	Ø35			44.37	44.76	22.75	23.53	18.38	15.40
	Ø38			49.97	50.36	28.35	29.13	23.98	21.00
	Ø42			49.47	49.86	27.85	28.63	23.48	20.50
	Ø48			49.87	50.26	28.25	29.03	23.88	20.90

a) Nominal output torque when operating at n_{1N}.
b) 1000 cycles per hour max.
c) Valid for an ambient temperature of 20°C and T_{2N}. At higher ambient temperatures, please reduce speed.
d) Valid 1000 times the gearbox life.
e) Valid for an input Ø of 48mm in 1-stage and 38mm in 2- and 3-stage.
f) Values for 300 rpm.
g) For other temperatures, please contact us. Nominal output torque when operating at n_{1N}.
h) Depending on the motor output shaft Ø.
i) With n_{1N}=2500 rpm no load.

T_{2B} ≤ 1925 Nm

Rack

Rack for PR on request

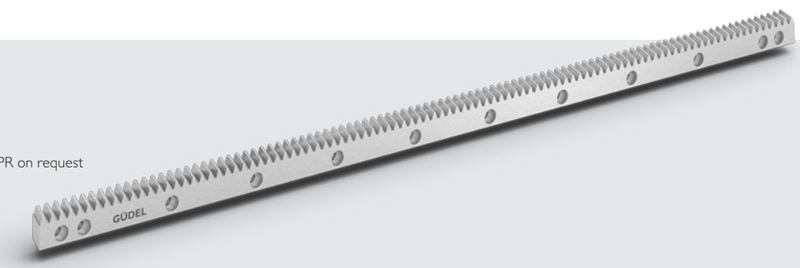

For proper sizing follow Flowchart **Calculate your ideal Drive Train** on pages 106 et seq.

More on the Technical Datasheets **Your ideal Drive Train** on pages 94 et seq.

Input

A	for motor shaft	L ≤ 60	19 ≤ Ød ≤ 32 result in LA
B	for motor shaft	60 < L ≤ 85	32 < Ød ≤ 48 result in LB
C	for motor shaft	85 < L ≤ 111	32 < Ød ≤ 48 result in LC

Output

Standard

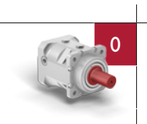

		1-stage	2-stage	3-stage
LA	[mm]	168	220	273
LB	[mm]	193	246	298
LC	[mm]	219	272	

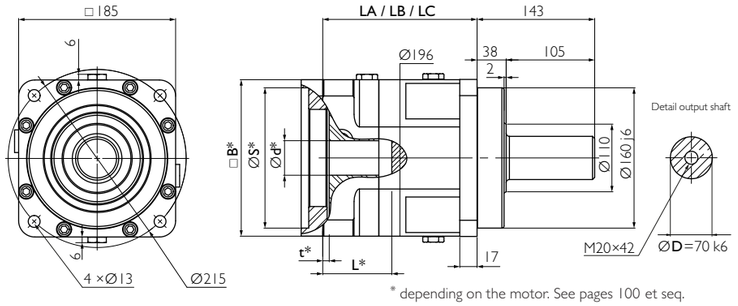

* depending on the motor. See pages 100 et seq.

Option

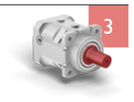

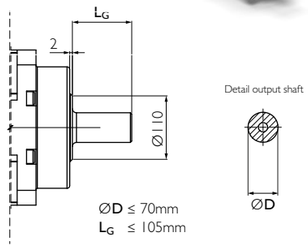

Option 3 on request. Adjustments can reduce capacity.

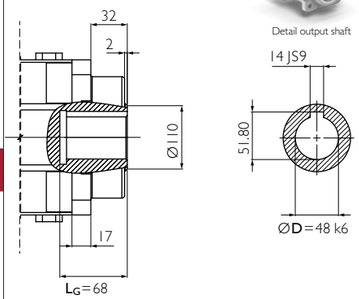

Option 4 on request. Adjustments can reduce capacity.

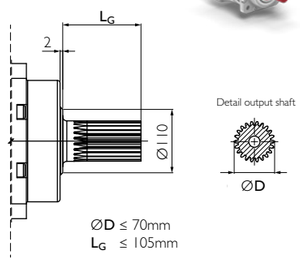

Option 5 on request. Adjustments can reduce capacity.

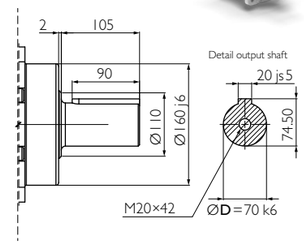

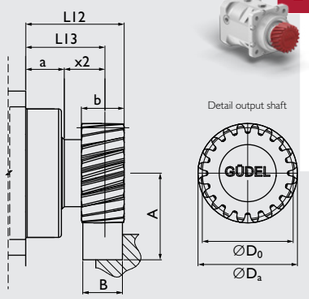

Option 2 on request. Adjustments can reduce capacity.

Example PR 180 A4, 1-stage

Material	16MnCr5 DIN 1.7131
Teeth	pressure angle α = 20°, helical teeth left, 19°31'42" hardened (58$^{+4}_{0}$ HRC), ground, crowned
Quality	6f24 DIN 3962 / 63 / 67
f_p [mm]	Adjacent pitch error 0.006

Your ideal Drive Train

Function Package with gearbox, rack and pinion from Güdel

Pinion

Pinion for PR on request

Available ratios *		i		3-stage 36	45	60	75	90	105	120	150	210	300
Nominal torque S5 a)		T_{2N}	[Nm]	1 600	1 600	1 600	1 600	1 600	1 600	1 600	1 600	1 600	1 600
Acceleration torque S5 b)		T_{2B}	[Nm]	1 900	1 900	1 900	1 900	1 900	1 900	1 900	1 900	1 900	1 900
Nominal input speed S5 c)		n_{1N}	[rpm]	2 200	2 700	2 700	2 700	2 700	2 700	2 700	2 700	2 700	2 700
Maximum input speed S5		n_{1max}	[rpm]	3 200	3 200	3 200	3 200	3 200	3 200	3 200	3 200	3 200	3 200
Emergency stop torque d)		T_{2not}	[Nm]	3 000	3 000	3 000	3 000	3 000	3 000	3 000	3 000	3 000	3 000
Efficiency		η	[%]	88%									
Life duration		L_h	[h]	> 20 000									
Weight		M	[kg]	46									
Angular backlash		j_t	[arcmin]	Precision **P 1** ≤ 1 / **P 3** ≤ 3 / **P 5** ≤ 5 / **P 12** ≤12									
Torsionnal rigidity e)		C_{t2}	[Nm/arcmin]	300.0	270.3	270.3	270.3	246.8	270.3	300.0	270.3	253.1	220.5
Noise i)		L_{pA}	[dB(A)]	≤ 72									
Max. permitted housing temperature g)		T	[°C]	90									
Protection class				IP 65									
Direction of rotation				Same way Input / Output									
Max. radial force on output shaft f)		$F_{r\,max}$	[N]	Center of output shaft: 18 000 / End of output shaft: 13 000									
Max. axial force on output shaft f)		$F_{a\,max}$	[N]	20 000									
Color				Red RAL 3003									
Inertia in kg.cm² h)	Ø19	J_1	[kgcm²]	23.60	17.37	16.77	16.52	9.22	11.77	9.07	9.01	8.96	8.93
	Ø24			24.65	18.42	17.82	17.57	10.27	12.82	10.12	10.06	10.01	9.98
	Ø32			26.86	20.63	20.03	19.78	12.48	15.03	12.33	12.27	12.22	12.19
	Ø35			29.78	23.55	22.95	22.70	15.40	17.95	15.25	15.19	15.14	15.11
	Ø38			35.38	29.15	28.55	28.30	21.00	23.55	20.85	20.79	20.74	20.71
	Ø42			34.88	28.65	28.05	27.80	20.50	23.05	20.35	20.29	20.24	20.21
	Ø48			35.28	29.05	28.45	28.20	20.90	23.45	20.75	20.69	20.64	20.61

* Other ratios available. 27, 48, 63, 84, 147 on request.
a) Nominal output torque when operating at n_{1N}.
b) 1000 cycles per hour max.
c) Valid for an ambient temperature of 20°C and T_{2N}. At higher ambient temperatures, please reduce speed.
d) Valid 1000 times the gearbox life.
e) Valid for an input Ø of 48mm in 1-stage and 38mm in 2- and 3-stage.
f) Values for 300 rpm.
g) For other temperatures, please contact us. Nominal output torque when operating at n_{1N}.
h) Depending on the motor output shaft Ø.
i) With n_{1N}=2500 rpm no load.

T_{2B} ≤ 1925 Nm

Rack

Rack for PR on request

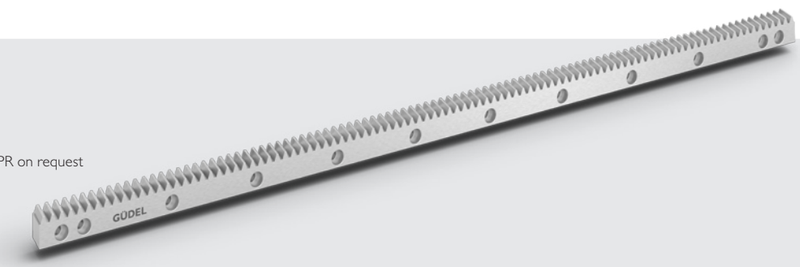

For proper sizing follow Flowchart **Calculate your ideal Drive Train** on pages 106 et seq.

More on the Technical Datasheets **Your ideal Drive Train** on pages 94 et seq.

Input

A	for motor shaft	L ≤ 85	24≤ Ød ≤ 48	result in LA
B	for motor shaft	85 < L ≤115	48 < Ød ≤ 55	result in LB

Output

Standard

		1-stage	2-stage	3-stage
LA	[mm]	229	300	371
LB	[mm]	259	330	

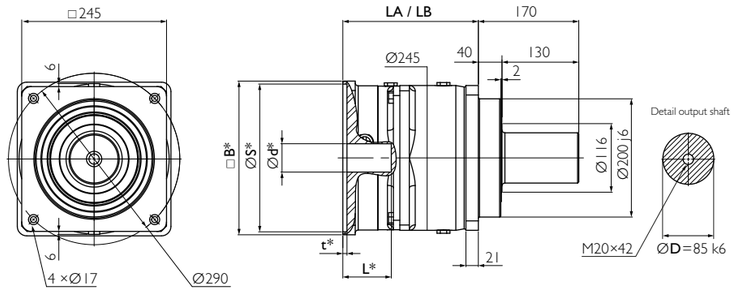

* depending on the motor. See pages 100 et seq.

Example NR 240 A0, 1-stage

Option

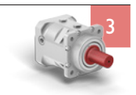

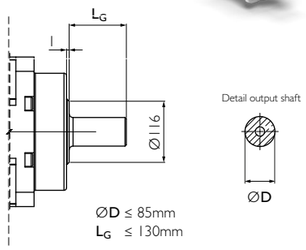

Option 3 on request. Adjustments can reduce capacity.

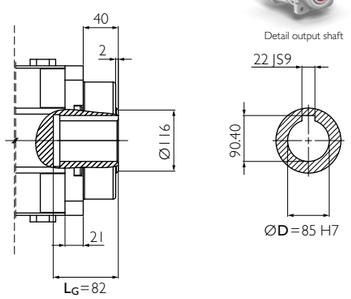

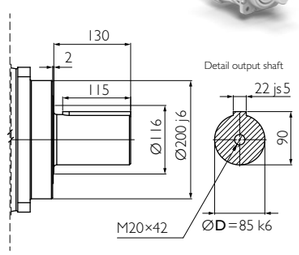

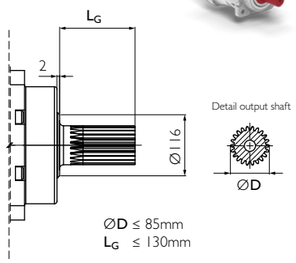

Option 5 on request. Adjustments can reduce capacity.

Your ideal Drive Train

Function Package with gearbox, rack and pinion from Güdel

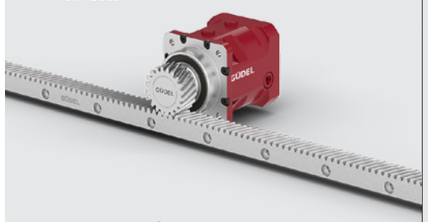

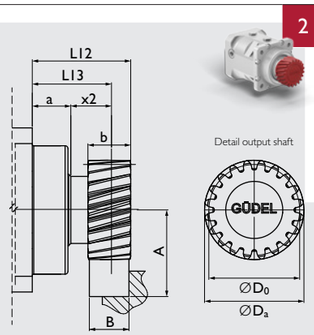

Material 16MnCr5 DIN 1.7131
Teeth pressure angle α = 20°, helical teeth left, 19°31'42"
hardened (58$^{+4}_{0}$ HRC), ground, crowned
Quality 6f24 DIN 3962 / 63 / 67
f_p [mm] Adjacent pitch error 0.006

Pinion

		m	z	A	b	B	D_a	D_0	L12	L13	x2	a
Pinion 1	[-]	5	24	97.662	50	49	137.32	127.324	112.5	87.5	47.5	40
Pinion 2	[-]	6	20	106.662	60	59	139.32	127.324	111	81	41	40

m: Module, z: Number of teeth

GÜDEL

Available ratios		i		1-stage 3	4	5	7	10
Nominal torque S5 a)		T_{2N}	[Nm]	2 400	2 700	2 700	2 500	1 700
Acceleration torque S5 b)		T_{2B}	[Nm]	3 400	3 800	3 800	3 600	2 400
Nominal input speed S5 c)		n_{1N}	[rpm]	1 000	1 000	1 000	1 500	1 500
Maximum input speed S5		n_{1max}	[rpm]	2 000	2 200	2 200	2 200	2 200
Nominal torque S1 a)		T_{2N}	[Nm]	1 400	1 600	1 600	1 600	1 600
Acceleration torque S1 b)		T_{2B}	[Nm]	1 750	1 750	1 750	1 750	1 750
Nominal input speed S1 c)		n_{1N}	[rpm]	700	900	900	1 350	1 350
Maximum input speed S1		n_{1max}	[rpm]	1 000	1 000	1 000	1 500	1 500
Emergency stop torque d)		T_{2not}	[Nm]	6 900	8 500	8 500	8 500	6 800
Efficiency		η	[%]	97%				
Life duration		L_h	[h]	> 20 000				
Weight		M	[kg]	70				
Angular backlash		j_t	[arcmin]	Precision P 1 ≤ 1 / P 3 ≤ 3 / P 5 ≤ 5 / P 12 ≤12				
Torsionnal rigidity e)		C_{t2}	[Nm/arcmin]	626	684	698	728	698
Noise i)		L_{pA}	[dB(A)]	≤ 72				
Max. permitted housing temperature g)		T	[°C]	90				
Protection class				IP 65				
Direction of rotation				Motor way				
Max. radial force on output shaft f)		$F_{r max}$	[N]	Center of output shaft: 30 000 / End of output shaft: 20 000				
Max. axial force on output shaft f)		$F_{a max}$	[N]	34 000				
Color				Red RAL 3003				
Inertia in kg.cm² h)	Ø24	J_1	[kgcm²]	151.00	83.30	58.00	36.80	24.30
	Ø32			153.20	85.50	60.20	39.00	26.50
	Ø35			158.50	90.80	65.50	44.30	31.80
	Ø38			161.90	94.20	68.90	47.70	35.20
	Ø42			161.40	93.70	68.40	47.20	34.70
	Ø48			161.60	93.90	68.60	47.40	34.90
	Ø55			184.20	116.50	91.20	70.00	57.50

a) Nominal output torque when operating at n_{1N}.
b) 1000 cycles per hour max.
c) Valid for an ambient temperature of 20°C and T_{2N}. At higher ambient temperatures, please reduce speed.
d) Valid 1000 times the gearbox life.
e) Valid for an input Ø of 55mm in 1-stage and 48mm in 2- and 3-stage.
f) Values for 300 rpm.
g) For other temperatures, please contact us. Nominal output torque when operating at n_{1N}.
h) Depending on the motor output shaft Ø.
i) With i=10 and n_{1N}=2000 rpm no load.

T_{2B} ≤ 3800 Nm

Rack

			Pinion 1	Pinion 2
Max acceleration force	F_{2B}	[N]	40 890	58 870
Max acceleration torque	T_{2B}	[Nm]	2 603	3 748

Above values for rack and pinion take into consideration a number of load cycles: 1×10^6 for the rack; 1×10^7 for the pinion. Both in pulsating operation.

For proper sizing follow Flowchart **Calculate your ideal Drive Train** on pages 106 et seq.

More on the Technical Datasheets **Your ideal Drive Train** on pages 94 et seq.

Input

A	for motor shaft	L ≤ 85	24 ≤ Ød ≤ 48	result in LA
B	for motor shaft	85 < L ≤ 115	48 < Ød ≤ 55	result in LB

Output

Standard

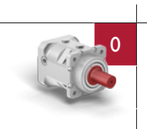

		1-stage	2-stage	3-stage
LA	[mm]	229	300	371
LB	[mm]	259	330	

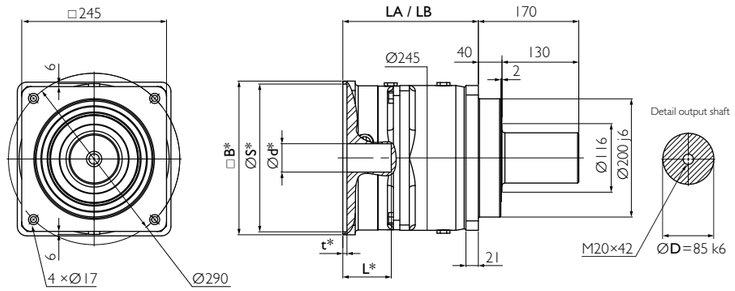

* depending on the motor. See pages 100 et seq.

Option

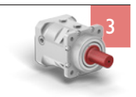

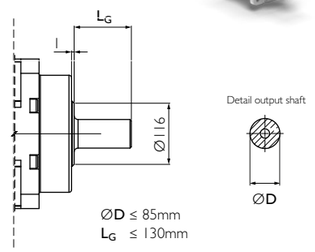

Option 3 on request. Adjustments can reduce capacity.

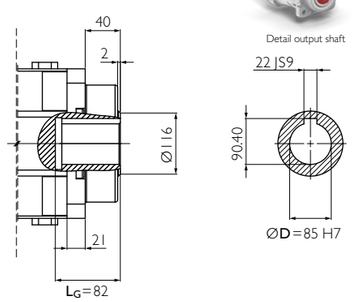

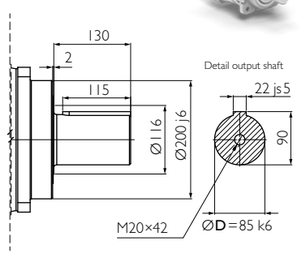

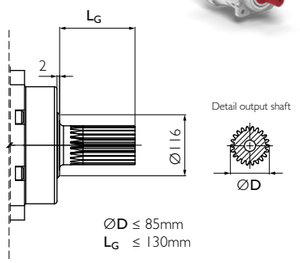

Option 5 on request. Adjustments can reduce capacity.

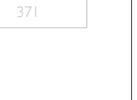

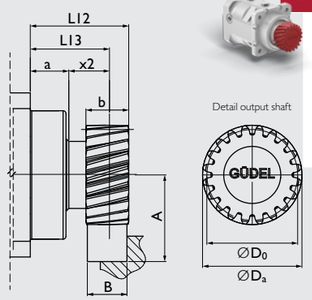

Material 16MnCr5 DIN 1.7131
Teeth pressure angle α = 20°, helical teeth left, 19°31'42"
hardened (58$^{+4}_{0}$ HRC), ground, crowned
Quality 6f24 DIN 3962 / 63 / 67
f_p [mm] Adjacent pitch error 0.006

Example NR 240 A1, 1-stage

Your ideal Drive Train

Function Package with gearbox, rack and pinion from Güdel

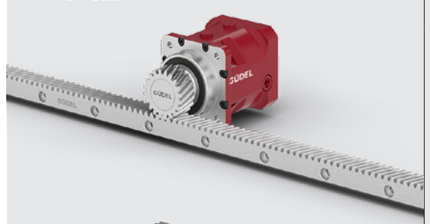

Pinion

		m	z	A	b	B	D_a	D_0	L12	L13	x2	a
Pinion 1	[-]	5	24	97.662	50	49	137.32	127.324	112.5	87.5	47.5	40
Pinion 2	[-]	6	20	106.662	60	59	139.32	127.324	111	81	41	40

m: Module, z: Number of teeth

GÜDEL

Available ratios *		i		2-stage									
				12	16	20	25	30	35	40	50	70	100
Nominal torque S5 a)		T_{2N}	[Nm]	2 400	2 700	2 700	2 700	2 400	2 700	2 700	2 700	2 500	1 700
Acceleration torque S5 b)		T_{2B}	[Nm]	3 200	3 800	3 800	3 800	3 200	3 800	3 800	3 800	3 600	2 200
Nominal input speed S5 c)		n_{1N}	[rpm]	1 700	1 900	1 900	1 900	1 900	1 900	1 900	2 100	2 100	2 400
Maximum input speed S5		n_{1max}	[rpm]	3 500	3 500	3 500	3 500	3 500	3 500	3 500	3 500	3 500	3 500
Nominal torque S1 a)		T_{2N}	[Nm]	1 600	1 600	1 600	1 600	1 600	1 600	1 600	1 600	1 600	1 600
Acceleration torque S1 b)		T_{2B}	[Nm]	1 750	1 750	1 750	1 750	1 750	1 750	1 750	1 750	1 750	1 750
Nominal input speed S1 c)		n_{1N}	[rpm]	1 200	1 700	1 700	1 700	1 700	1 700	1 700	1 900	1 900	2 100
Maximum input speed S1		n_{1max}	[rpm]	1 700	1 900	1 900	1 900	1 900	1 900	1 900	2 100	2 100	2 400
Emergency stop torque d)		T_{2not}	[Nm]	6 900	8 500	8 500	8 500	6 900	8 500	8 500	8 500	8 500	6 800
Efficiency		η	[%]	94%									
Life duration		L_h	[h]	> 20 000									
Weight		M	[kg]	90									
Angular backlash		j_t	[arcmin]	Precision **P 1** ≤ 1 / **P 3** ≤ 3 / **P 5** ≤ 5 / **P 12** ≤12									
Torsionnal rigidity e)		C_{t2}	[Nm/arcmin]	564.5	582.0	599.5	599.5	564.5	599.5	582.0	599.5	587.8	564.5
Noise i)		L_{pA}	[dB(A)]	≤ 72									
Max. permitted housing temperature g)		T	[°C]	90									
Protection class				IP 65									
Direction of rotation				Same way Input / Output									
Max. radial force on output shaft f)		$F_{r\,max}$	[N]	Center of output shaft: 30 000 / End of output shaft: 20 000									
Max. axial force on output shaft f)		$F_{a\,max}$	[N]	34 000									
Color				Red RAL 3003									
Inertia in kg.cm² h)	Ø24	J_1	[kgcm²]	79.1	74.9	73.3	51.5	23.6	33.5	22.9	22.7	22.4	22.3
	Ø32			81.3	77.1	75.5	53.7	25.8	35.7	25.1	24.9	24.6	24.5
	Ø35			86.6	82.4	80.8	59	31.1	41	30.4	30.2	29.9	29.8
	Ø38			90	85.8	84.2	62.4	34.5	44.4	33.8	33.6	33.3	33.2
	Ø42			89.5	85.3	83.7	61.9	34	43.9	33.3	33.1	32.8	32.7
	Ø48			89.7	85.5	83.9	62.1	34.2	44.1	33.5	33.3	33	32.9
	Ø55			112.3	108.1	106.5	84.7	56.8	66.7	56.1	55.9	55.6	55.5

* Other ratios available. 9, 15, 21, 27, 28, 49 on request.
a) Nominal output torque when operating at n_{1N}.
b) 1000 cycles per hour max.
c) Valid for an ambient temperature of 20°C and T_{2N}. At higher ambient temperatures, please reduce speed.
d) Valid 1000 times the gearbox life.
e) Valid for an input Ø of 55mm in 1-stage and 48mm in 2- and 3-stage.
f) Values for 300 rpm.
g) For other temperatures, please contact us. Nominal output torque when operating at n_{1N}.
h) Depending on the motor output shaft Ø.
i) With **i**=10 and n_{1N}=2000 rpm no load.

T_{2B} ≤ 3800 Nm

Rack

			Pinion 1	Pinion 2
Max acceleration force	F_{2B}	[N]	40 890	58 870
Max acceleration torque	T_{2B}	[Nm]	2 603	3 748

Above values for rack and pinion take into consideration a number of load cycles: 1×10^6 for the rack; 1×10^7 for the pinion. Both in pulsating operation.

For proper sizing follow Flowchart **Calculate your ideal Drive Train** on pages 106 et seq.

More on the Technical Datasheets **Your ideal Drive Train** on pages 94 et seq.

Input

A	for motor shaft	L ≤ 85	24 ≤ Ød ≤ 48	result in LA
B	for motor shaft	85 < L ≤ 115	48 < Ød ≤ 55	result in LB

Output

Standard

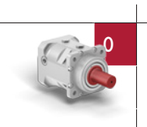

		1-stage	2-stage	3-stage
LA	[mm]	229	300	371
LB	[mm]	259	330	

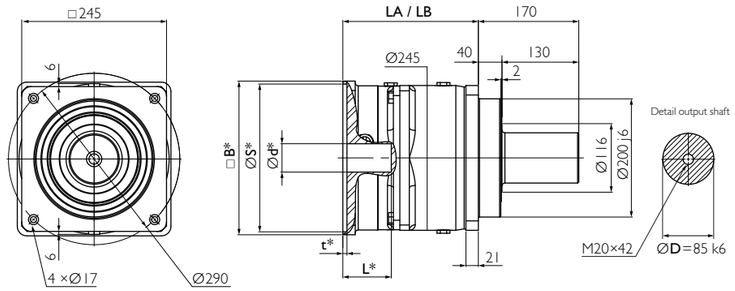

* depending on the motor. See pages 100 et seq.

Option

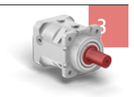

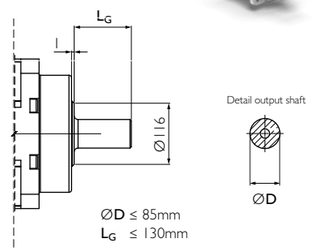

Option 3 on request. Adjustments can reduce capacity.

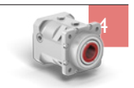

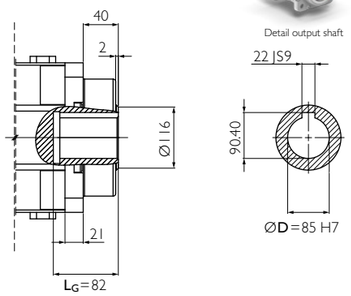

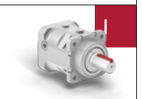

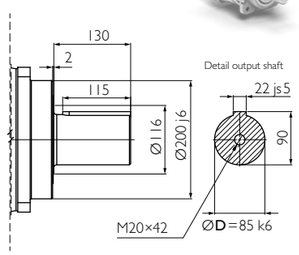

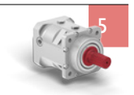

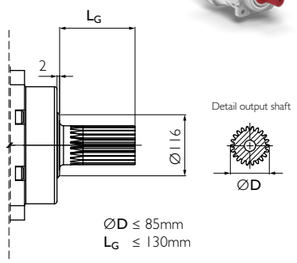

Option 5 on request. Adjustments can reduce capacity.

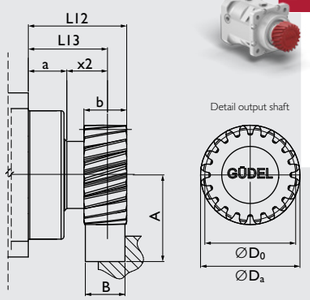

Material	16MnCr5 DIN 1.7131
Teeth	pressure angle α = 20°, helical teeth left, 19°31'42" hardened (58+4 HRC), ground, crowned
Quality	6f24 DIN 3962 / 63 / 67
f_p [mm]	Adjacent pitch error 0.006

Example NR 240 A2, 1-stage

Your ideal Drive Train

Function Package with gearbox, rack and pinion from Güdel

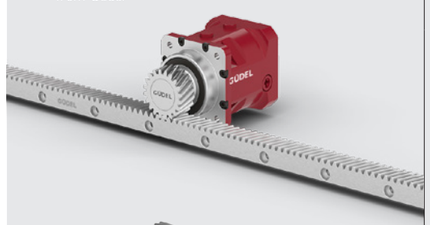

Pinion

		m	z	A	b	B	D_a	D_0	L12	L13	x2	a
Pinion 1	[-]	5	24	97.662	50	49	137.32	127.324	112.5	87.5	47.5	40
Pinion 2	[-]	6	20	106.662	60	59	139.32	127.324	111	81	41	40

m: Module, z: Number of teeth

GÜDEL

Available ratios *		i		3-stage									
				105	125	175	200	250	300	400	500	700	1 000
Nominal torque S5 a)		T_{2N}	[Nm]	2 700	2 700	2 700	2 700	2 700	2 400	2 700	2 700	2 500	1 500
Acceleration torque S5 b)		T_{2B}	[Nm]	3 800	3 800	3 800	3 800	3 800	3 000	3 800	3 800	3 600	2 200
Nominal input speed S5 c)		n_{1N}	[rpm]	2 400	2 400	2 400	2 400	2 400	2 400	2 400	2 400	2 400	2 400
Maximum input speed S5		n_{1max}	[rpm]	3 500	3 500	3 500	3 500	3 500	3 500	3 500	3 500	3 500	3 500
Nominal torque S1 a)		T_{2N}	[Nm]	1 600	1 600	1 600	1 600	1 600	1 600	1 600	1 600	1 600	1 600
Acceleration torque S1 b)		T_{2B}	[Nm]	1 750	1 750	1 750	1 750	1 750	1 750	1 750	1 750	1 750	1 750
Nominal input speed S1 c)		n_{1N}	[rpm]	2 100	2 100	2 100	2 100	2 100	2 100	2 100	2 100	2 100	2 100
Maximum input speed S1		n_{1max}	[rpm]	2 400	2 400	2 400	2 400	2 400	2 400	2 400	2 400	2 400	2 400
Emergency stop torque d)		T_{2not}	[Nm]	8 500	8 500	8 500	8 500	8 500	6 900	8 500	8 500	8 500	6 800
Efficiency		η	[%]	91%									
Life duration		L_h	[h]	> 20 000									
Weight		M	[kg]	110									
Angular backlash		j_t	[arcmin]	Precision **P 1** ≤ 1 / **P 3** ≤ 3 / **P 5** ≤ 5 / **P 12** ≤12									
Torsionnal rigidity e)		C_{t2}	[Nm/arcmin]	538	538	538	538	538	506	524	538	556	524
Noise i)		L_{pA}	[dB(A)]	≤ 72									
Max. permitted housing temperature g)		T	[°C]	90									
Protection class				IP 65									
Direction of rotation				Same way Input / Output									
Max. radial force on output shaft f)		$F_{r max}$	[N]	Center of output shaft: 30 000 / End of output shaft: 20 000									
Max. axial force on output shaft f)		$F_{a max}$	[N]	34 000									
Color				Red RAL 3003									
Inertia in kg.cm² h)	Ø24	J_1	[kgcm²]	35.10	51.30	35.10	22.80	22.60	22.30	22.30	22.30	22.30	22.30
	Ø32			37.30	53.50	37.30	25.00	24.80	24.50	24.50	24.50	24.50	24.50
	Ø35			42.60	58.80	42.60	30.30	30.10	29.80	29.80	29.80	29.80	29.80
	Ø38			46.00	62.20	46.00	33.70	33.50	33.20	33.20	33.20	33.20	33.20
	Ø42			45.50	61.70	45.50	33.20	33.00	32.70	32.70	32.70	32.70	32.70
	Ø48			45.70	61.70	45.70	33.40	33.20	32.90	32.90	32.90	32.90	32.90
	Ø55			68.30	84.50	68.30	56.00	55.80	55.50	55.50	55.50	55.50	55.50

* Other ratios available. 112, 120, 140, 147, 150, 160, 196, 210, 245, 280, 343, 350, 490 on request.
a) Nominal output torque when operating at n_{1N}.
b) 1000 cycles per hour max.
c) Valid for an ambient temperature of 20°C and T_{2N}. At higher ambient temperatures, please reduce speed.
d) Valid 1000 times the gearbox life.
e) Valid for an input Ø of 55mm in 1-stage and 48mm in 2- and 3-stage.
f) Values for 300 rpm.
g) For other temperatures, please contact us. Nominal output torque when operating at n_{1N}.
h) Depending on the motor output shaft Ø.
i) With i=10 and n_{1N}=2000 rpm no load.

T_{2B} ≤ 3800 Nm

Rack

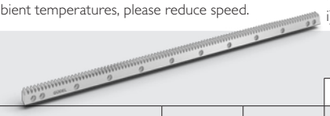

				Pinion 1	Pinion 2
Max acceleration force		F_{2B}	[N]	40 890	58 870
Max acceleration torque		T_{2B}	[Nm]	2 603	3 748

Above values for rack and pinion take into consideration a number of load cycles: 1×10^6 for the rack; 1×10^7 for the pinion. Both in pulsating operation.

For proper sizing follow Flowchart **Calculate your ideal Drive Train** on pages 106 et seq.

More on the Technical Datasheets **Your ideal Drive Train** on pages 94 et seq.

Input

A	for motor shaft	L ≤ 85	24 ≤ Ød ≤ 48	result in LA
B	for motor shaft	85 < L ≤ 115	48 < Ød ≤ 55	result in LB

Output

Standard

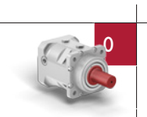

		1-stage	2-stage	3-stage
LA	[mm]	229	300	371
LB	[mm]	259	330	

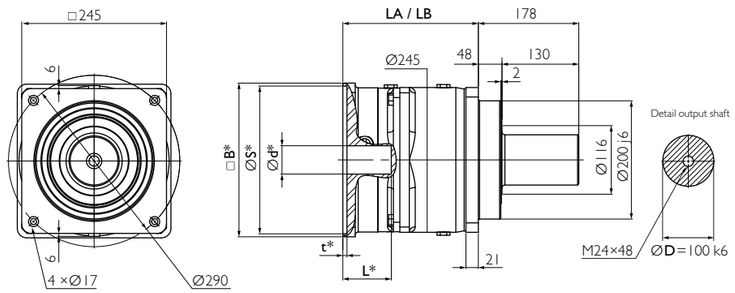

* depending on the motor. See pages 100 et seq.

Example SR 240 B4, 1-stage

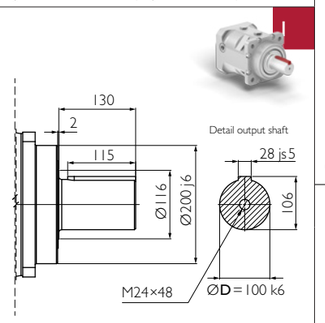

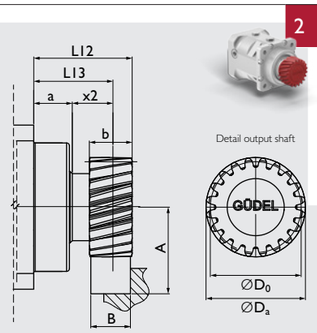

Option

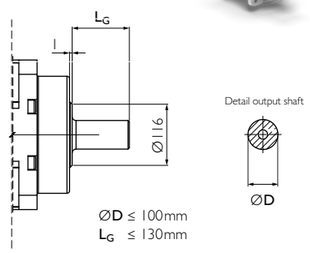

Option 3 on request. Adjustments can reduce capacity.

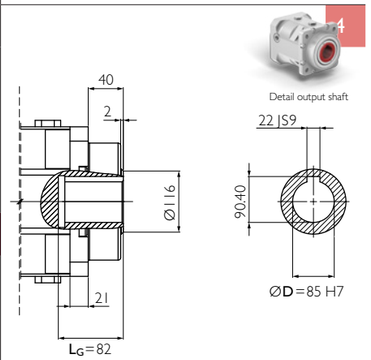

Option 4 on request. Adjustments can reduce capacity.

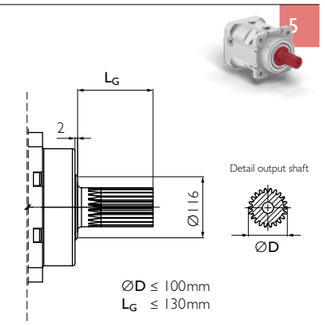

Option 5 on request. Adjustments can reduce capacity.

Your ideal Drive Train

Function Package with gearbox, rack and pinion from Güdel

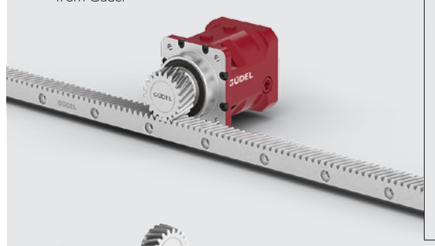

Material	16MnCr5 DIN 1.7131
Teeth	pressure angle α = 20°, helical teeth left, 19°31'42" hardened (58$^{+4}_{0}$ HRC), ground, crowned
Quality	6f24 DIN 3962 / 63 / 67
f_p [mm]	Adjacent pitch error 0.006

Pinion

		m	z	A	b	B	D_a	D_0	L12	L13	x2	a
Pinion 1	[-]	5	24	97.662	50	49	137.32	127.324	112.5	87.5	47.5	40
Pinion 2	[-]	6	20	106.662	60	59	139.32	127.324	111	81	41	40

m: Module, z: Number of teeth

GÜDEL

Available ratios		i		1-stage	2-stage				
				4	12	16	20	28	40
Nominal torque S5 a)		T_{2N}	[Nm]	3 600	3 600	3 600	3 600	3 600	3 600
Acceleration torque S5 b)		T_{2B}	[Nm]	4 800	4 800	4 800	4 800	4 800	4 800
Nominal input speed S5 c)		n_{1N}	[rpm]	900	1 500	1 700	1 700	1 700	1 700
Maximum input speed S5		n_{1max}	[rpm]	2 000	3 100	3 100	3 100	3 100	3 100
Emergency stop torque d)		T_{2not}	[Nm]	8 500	8 500	8 500	8 500	8 500	8 500
Efficiency		η	[%]	96%	93%				
Life duration		L_h	[h]	> 20 000					
Weight		M	[kg]	70	90				
Angular backlash		j_t	[arcmin]	Precision **P 1** ≤ 1 / **P 3** ≤ 3 / **P 5** ≤ 5 / **P 12** ≤12					
Torsionnal rigidity e)		C_{t2}	[Nm/arcmin]	718.8	593.5	611.0	628.5	611.0	611.0
Noise i)		L_{pA}	[dB(A)]	≤ 73					
Max. permitted housing temperature g)		T	[°C]	90					
Protection class				IP 65					
Direction of rotation				Same way Input / Output					
Max. radial force on output shaft f)		$F_{r max}$	[N]	Center of output shaft: 37 500 / End of output shaft: 25 000					
Max. axial force on output shaft f)		$F_{a max}$	[N]	34 000					
Color				Red RAL 3003					
Inertia in kg.cm² h)	Ø24	J_1	[kgcm²]	83.3	79.1	74.9	73.3	34.0	22.9
	Ø32			85.5	81.3	77.1	75.5	36.2	25.1
	Ø35			90.8	86.6	82.4	80.8	41.5	30.4
	Ø38			94.2	90.0	85.8	84.2	44.9	33.8
	Ø42			93.7	89.5	85.3	83.7	44.4	33.3
	Ø48			93.9	89.7	85.5	83.9	44.6	33.5
	Ø55			116.5	112.3	108.1	106.5	67.2	56.1

a) Nominal output torque when operating at n_{1N}.
b) 1000 cycles per hour max.
c) Valid for an ambient temperature of 20°C and T_{2N}. At higher ambient temperatures, please reduce speed.
d) Valid 1000 times the gearbox life.
e) Valid for an input Ø of 55mm in 1-stage and 48mm in 2- and 3-stage.
f) Values for 300 rpm.
g) For other temperatures, please contact us. Nominal output torque when operating at n_{1N}.
h) Depending on the motor output shaft Ø.
i) With n_{1N}=1800 rpm no load.

Rack

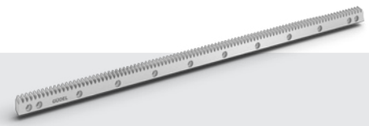

			Pinion 1	Pinion 2
Max acceleration force	F_{2B}	[N]	40 890	58 870
Max acceleration torque	T_{2B}	[Nm]	2 603	3 748

Above values for rack and pinion take into consideration a number of load cycles: 1×10^6 for the rack; 1×10^7 for the pinion. Both in pulsating operation.

For proper sizing follow Flowchart **Calculate your ideal Drive Train** on pages 106 et seq.

More on the Technical Datasheets **Your ideal Drive Train** on pages 94 et seq.

Input

A	for motor shaft	L ≤ 85	24 ≤ Ød ≤ 48	result in LA
B	for motor shaft	85 < L ≤ 115	48 < Ød ≤ 55	result in LB

Output

Standard

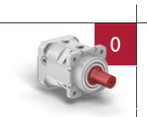

		1-stage	2-stage	3-stage
LA	[mm]	229	300	371
LB	[mm]	259	330	

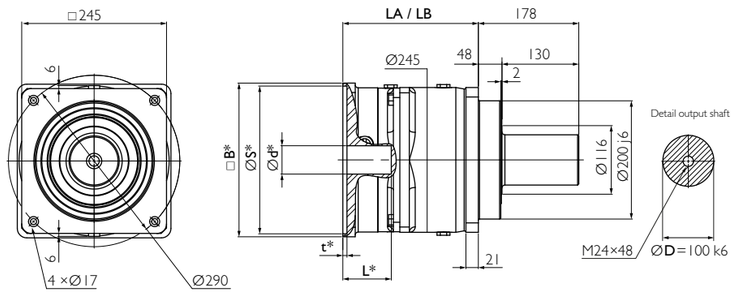

* depending on the motor. See pages 100 et seq.

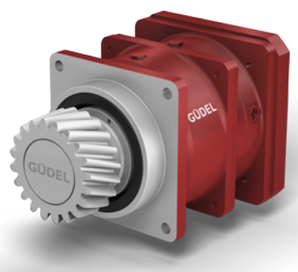

Example SR 240 B2, 1-stage

Option

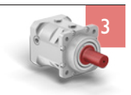

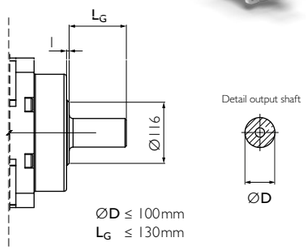

Option 3 on request. Adjustments can reduce capacity.

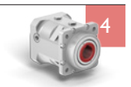

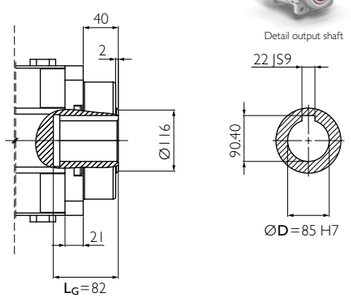

Option 4 on request. Adjustments can reduce capacity.

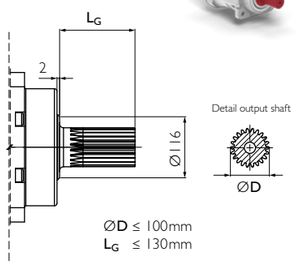

Option 5 on request. Adjustments can reduce capacity.

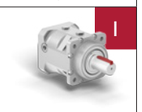

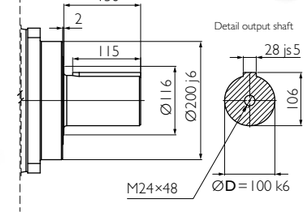

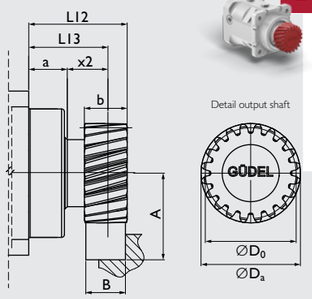

Your ideal Drive Train

Function Package with gearbox, rack and pinion from Güdel

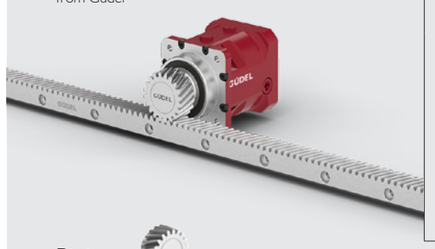

Material	16MnCr5 DIN 1.7131
Teeth	pressure angle α = 20°, helical teeth left, 19°31'42" hardened (58$^{+4}_{0}$ HRC), ground, crowned
Quality	6f24 DIN 3962 / 63 / 67
f_p [mm]	Adjacent pitch error 0.006

Pinion

		m	z	A	b	B	D_a	D_0	L12	L13	x2	a
Pinion 1	[-]	5	24	97.662	50	49	137.32	127.324	112.5	87.5	47.5	40
Pinion 2	[-]	6	20	106.662	60	59	139.32	127.324	111	81	41	40

m: Module, z: Number of teeth

Available ratios *		i		3-stage 60	80	100	112	120	140	160	200	280	400
Nominal torque S5 a)		T_{2N}	[Nm]	3 600	3 600	3 600	3 600	3 600	3 600	3 600	3 600	3 600	3 600
Acceleration torque S5 b)		T_{2B}	[Nm]	4 800	4 800	4 800	4 800	4 800	4 800	4 800	4 800	4 800	4 800
Nominal input speed S5 c)		n_{1N}	[rpm]	2 100	2 100	2 100	2 100	2 100	2 100	2 100	2 100	2 100	2 100
Maximum input speed S5		n_{1max}	[rpm]	3 100	3 100	3 100	3 100	3 100	3 100	3 100	3 100	3 100	3 100
Emergency stop torque d)		T_{2not}	[Nm]	8 500	8 500	8 500	8 500	8 500	8 500	8 500	8 500	8 500	8 500
Efficiency		η	[%]	90%									
Life duration		L_h	[h]	> 20 000									
Weight		M	[kg]	110									
Angular backlash		j_t	[arcmin]	Precision **P 1** ≤ 1 / **P 3** ≤ 3 / **P 5** ≤ 5 / **P 12** ≤12									
Torsionnal rigidity e)		C_{t2}	[Nm/arcmin]	532.4	532.4	593.5	550.0	550.0	564.5	550.0	564.5	550.0	561.5
Noise i)		L_{pA}	[dB(A)]	≤ 73									
Max. permitted housing temperature g)		T	[°C]	90									
Protection class				IP 65									
Direction of rotation				Same way Input / Output									
Max. radial force on output shaft f)		$F_{r max}$	[N]	Center of output shaft: 37 500 / End of output shaft: 25 000									
Max. axial force on output shaft f)		$F_{a max}$	[N]	34 000									
Color				Red RAL 3003									
Inertia in kg.cm² h)	Ø24	J_1	[kgcm²]	78.0	74.2	22.3	33.9	23.4	33.9	22.8	22.8	22.4	22.3
	Ø32			80.2	76.4	24.5	36.1	25.6	36.1	25.0	25.0	24.6	24.5
	Ø35			85.5	81.7	29.8	41.4	30.9	41.4	30.3	30.3	29.9	29.8
	Ø38			88.9	85.1	33.2	44.8	34.3	44.8	33.7	33.7	33.3	33.2
	Ø42			88.4	84.6	32.7	44.3	33.8	44.3	33.2	33.2	32.8	32.7
	Ø48			88.6	84.8	32.9	44.5	34.0	44.5	33.4	33.4	33.0	32.9
	Ø55			111.2	107.4	55.5	67.1	56.6	67.1	56.0	56.0	55.6	55.5

* Other ratios available. 36, 64, 84, 180, 196, 300, 360, 500, 600, 700, 1 000 on request.
a) Nominal output torque when operating at n_{1N}.
b) 1000 cycles per hour max.
c) Valid for an ambient temperature of 20°C and T_{2N}. At higher ambient temperatures, please reduce speed.
d) Valid 1000 times the gearbox life.
e) Valid for an input Ø of 55mm in 1-stage and 48mm in 2- and 3-stage.
f) Values for 300 rpm.
g) For other temperatures, please contact us. Nominal output torque when operating at n_{1N}.
h) Depending on the motor output shaft Ø.
i) With n_{1N}=1800 rpm no load.

T_{2B} ≤ 4800 Nm

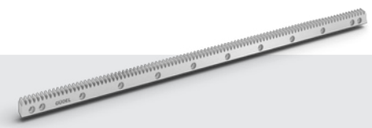

Rack

			Pinion 1	Pinion 2
Max acceleration force	F_{2B}	[N]	40 890	58 870
Max acceleration torque	T_{2B}	[Nm]	2 603	3 748

Above values for rack and pinion take into consideration a number of load cycles: 1×10^6 for the rack; 1×10^7 for the pinion. Both in pulsating operation.

For proper sizing follow Flowchart **Calculate your ideal Drive Train** on pages 106 et seq.

More on the Technical Datasheets **Your ideal Drive Train** on pages 94 et seq.

Input

A	for motor shaft	L ≤ 85	24 ≤ Ød ≤ 48	result in LA
B	for motor shaft	85 < L ≤ 115	48 < Ød ≤ 55	result in LB

Output

Standard

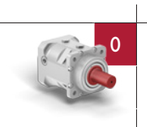

		1-stage	2-stage	3-stage
LA	[mm]	229	300	371
LB	[mm]	259	330	

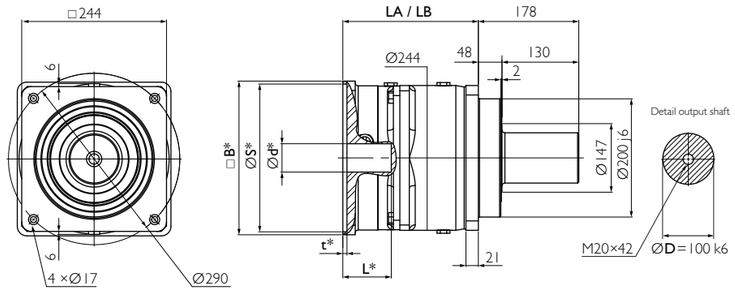

* depending on the motor. See pages 100 et seq.

Option

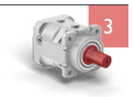

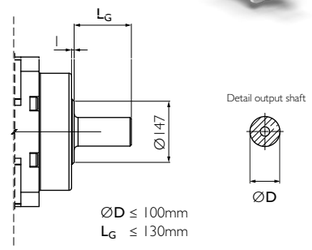

Option 3 on request. Adjustments can reduce capacity.

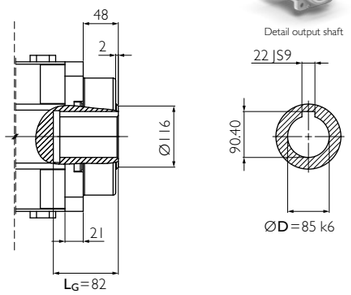

Option 4 on request. Adjustments can reduce capacity.

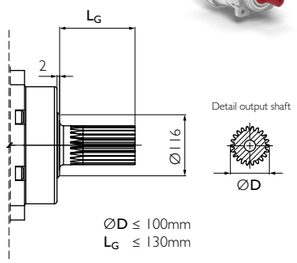

Option 5 on request. Adjustments can reduce capacity.

Example PR 240 A5, 1-stage

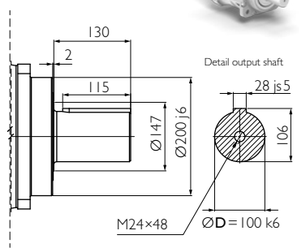

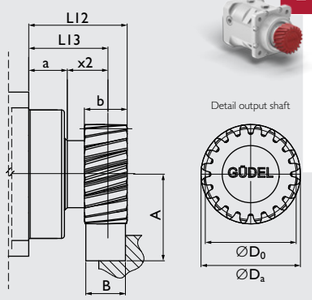

Option 2 on request. Adjustments can reduce capacity.

Your ideal Drive Train

Function Package with gearbox, rack and pinion from Güdel

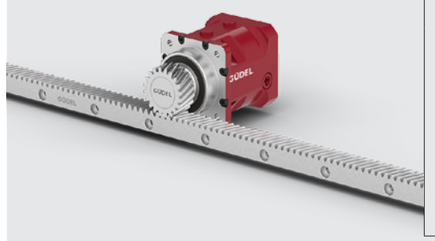

Material	16MnCr5 DIN 1.7131
Teeth	pressure angle α = 20°, helical teeth left, 19°31'42" hardened (58^{+4}_{0} HRC), ground, crowned
Quality	6f24 DIN 3962 / 63 / 67
f_p [mm]	Adjacent pitch error 0.006

Pinion

Pinion for PR on request

Available ratios		i		1-stage 3	2-stage 9	12	15	21	30
Nominal torque S5 a)		T_{2N}	[Nm]	4 400	4 400	4 400	4 400	4 400	4 400
Acceleration torque S5 b)		T_{2B}	[Nm]	5 600	5 600	5 600	5 600	5 600	5 600
Nominal input speed S5 c)		n_{1N}	[rpm]	800	800	1 400	1 500	1 500	1 500
Maximum input speed S5		n_{1max}	[rpm]	1 600	1 600	2 800	2 800	2 800	2 800
Emergency stop torque d)		T_{2not}	[Nm]	8 500	8 500	8 500	8 500	8 500	8 500
Efficiency		η	[%]	94%	91%				
Life duration		L_h	[h]	> 20 000					
Weight		M	[kg]	70	90				
Angular backlash		j_t	[arcmin]	Precision **P 1** ≤ 1 / **P 3** ≤ 3 / **P 5** ≤ 5 / **P 12** ≤12					
Torsionnal rigidity e)		C_{t2}	[Nm/arcmin]	814.7	730.3	756.6	779.8	805.9	736.1
Noise i)		L_{pA}	[dB(A)]	≤ 74					
Max. permitted housing temperature g)		T	[°C]	90					
Protection class				IP 65					
Direction of rotation				Same way Input / Output					
Max. radial force on output shaft f)		$F_{r max}$	[N]	Center of output shaft: 37 500 / End of output shaft: 25 000					
Max. axial force on output shaft f)		$F_{a max}$	[N]	34 000					
Color				Red RAL 3003					
Inertia in kg.cm² h)	Ø24	J_1	[kgcm²]	161.0	146.0	79.1	55.0	35.4	23.6
	Ø32			163.2	148.2	81.3	57.2	37.6	25.8
	Ø35			168.5	153.5	86.6	62.5	42.9	31.1
	Ø38			171.9	156.9	90.0	65.9	46.3	34.5
	Ø42			171.4	156.4	89.5	65.4	45.8	34.0
	Ø48			171.6	156.6	89.7	65.6	46.0	34.2
	Ø55			194.2	179.2	112.3	88.2	68.6	56.8

a) Nominal output torque when operating at n_{1N}.
b) 1000 cycles per hour max.
c) Valid for an ambient temperature of 20°C and T_{2N}. At higher ambient temperatures, please reduce speed.
d) Valid 1000 times the gearbox life.
e) Valid for an input Ø of 55mm in 1-stage and 48mm in 2- and 3-stage.
f) Values for 300 rpm.
g) For other temperatures, please contact us. Nominal output torque when operating at n_{1N}.
h) Depending on the motor output shaft Ø.
i) With n_{1N}=1800 rpm no load.

T_{2B} ≤ 5600 Nm

Rack

Rack for PR on request

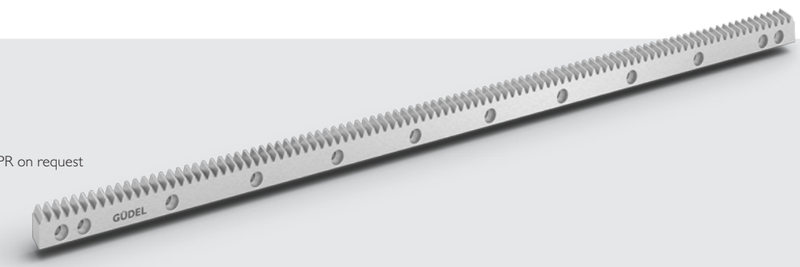

For proper sizing follow Flowchart **Calculate your ideal Drive Train** on pages 106 et seq.

More on the Technical Datasheets **Your ideal Drive Train** on pages 94 et seq.

Input

A	for motor shaft	L ≤ 85	24 ≤ Ød ≤ 48	result in LA
B	for motor shaft	85 < L ≤ 115	48 < Ød ≤ 55	result in LB

Output

Standard

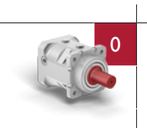

		1-stage	2-stage	3-stage
LA	[mm]	229	300	371
LB	[mm]	259	330	

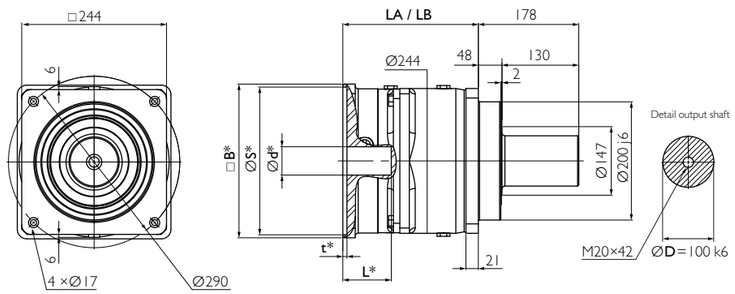

* depending on the motor. See pages 100 et seq.

Example PR 240 B4, 1-stage

Option

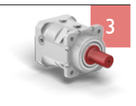

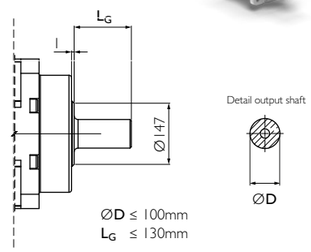

Option 3 on request. Adjustments can reduce capacity.

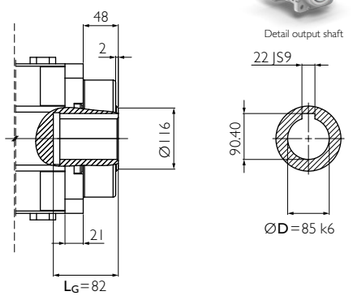

Option 4 on request. Adjustments can reduce capacity.

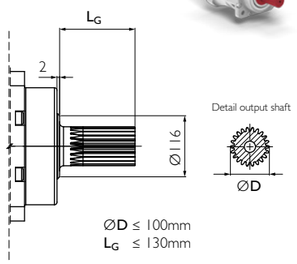

Option 5 on request. Adjustments can reduce capacity.

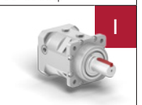

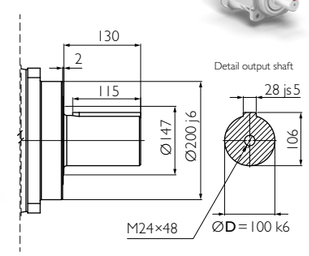

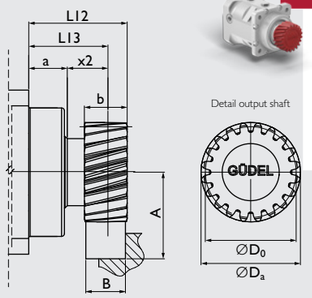

Option 2 on request. Adjustments can reduce capacity.

Your ideal Drive Train

Function Package with gearbox, rack and pinion from Güdel

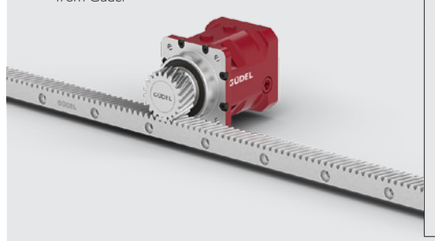

Material	16MnCr5 DIN 1.7131
Teeth	pressure angle α = 20°, helical teeth left, 19°31'42" hardened (58^{+4}_{0} HRC), ground, crowned
Quality	6f24 DIN 3962 / 63 / 67
f_p [mm]	Adjacent pitch error 0.006

Pinion

Pinion for PR on request

Available ratios *		i		3-stage									
				36	45	60	75	90	105	120	150	210	300
Nominal torque S5 a)		T_{2N}	[Nm]	4 400	4 400	4 400	4 400	4 400	4 400	4 400	4 400	4 400	4 400
Acceleration torque S5 b)		T_{2B}	[Nm]	5 600	5 600	5 600	5 600	5 600	5 600	5 600	5 600	5 600	5 600
Nominal input speed S5 c)		n_{1N}	[rpm]	1 600	1 900	1 900	1 900	1 900	1 900	1 900	1 900	1 900	1 900
Maximum input speed S5		n_{1max}	[rpm]	2 800	2 800	2 800	2 800	2 800	2 800	2 800	2 800	2 800	2 800
Emergency stop torque d)		T_{2not}	[Nm]	8 500	8 500	8 500	8 500	8 500	8 500	8 500	8 500	8 500	8 500
Efficiency		η	[%]	88%									
Life duration		L_h	[h]	> 20 000									
Weight		M	[kg]	110									
Angular backlash		j_t	[arcmin]	Precision P 1 ≤ 1 / P 3 ≤ 3 / P 5 ≤ 5 / P 12 ≤12									
Torsionnal rigidity e)		C_{t2}	[Nm/arcmin]	680.9	701.3	660.6	701.3	660.6	701.3	680.9	692.6	718.8	660.6
Noise i)		L_{pA}	[dB(A)]	≤ 74									
Max. permitted housing temperature g)		T	[°C]	90									
Protection class				IP 65									
Direction of rotation				Same way Input / Output									
Max. radial force on output shaft f)		$F_{r max}$	[N]	Center of output shaft: 37 500 / End of output shaft: 25 000									
Max. axial force on output shaft f)		$F_{a max}$	[N]	34 000									
Color				Red RAL 3003									
Inertia in kg.cm² h)	Ø24	J_1	[kgcm²]	78.6	55.0	78.2	54.6	23.5	35.1	23.4	23.4	23.4	22.3
	Ø32			80.8	57.2	80.4	56.8	25.7	37.3	25.6	25.6	25.6	24.5
	Ø35			86.1	62.5	85.7	62.1	31.0	42.6	30.9	30.9	30.9	29.8
	Ø38			89.5	65.9	89.1	65.5	34.4	46.0	34.3	34.3	34.3	33.2
	Ø42			89.0	65.4	88.6	65.0	33.9	45.5	33.8	33.8	33.8	32.7
	Ø48			89.2	65.6	88.8	65.2	34.1	45.7	34.0	34.0	34.0	32.9
	Ø55			111.8	88.2	111.4	87.8	56.7	68.3	56.6	56.6	56.6	55.5

* Other ratios available. 27, 48, 63, 84, 147 on request.
a) Nominal output torque when operating at n_{1N}.
b) 1000 cycles per hour max.
c) Valid for an ambient temperature of 20°C and T_{2N}. At higher ambient temperatures, please reduce speed.
d) Valid 1000 times the gearbox life.
e) Valid for an input Ø of 55mm in 1-stage and 48mm in 2- and 3-stage.
f) Values for 300 rpm.
g) For other temperatures, please contact us. Nominal output torque when operating at n_{1N}.
h) Depending on the motor output shaft Ø.
i) With n_{1N}=1800 rpm no load.

Rack

Rack for PR on request

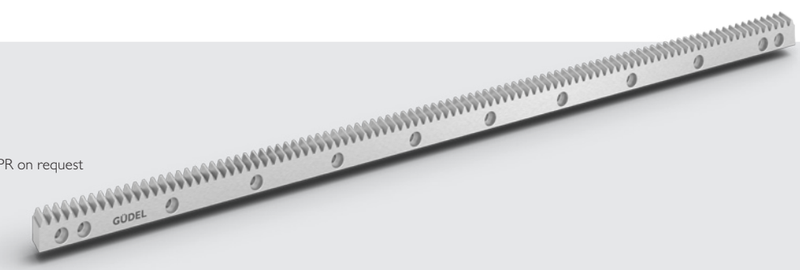

For proper sizing follow Flowchart **Calculate your ideal Drive Train** on pages 106 et seq.

More on the Technical Datasheets **Your ideal Drive Train** on pages 94 et seq.

Full Rack and Pinion Programm

Our Function Package for your ideal Drive Train with gearbox, rack and pinion from Güdel.

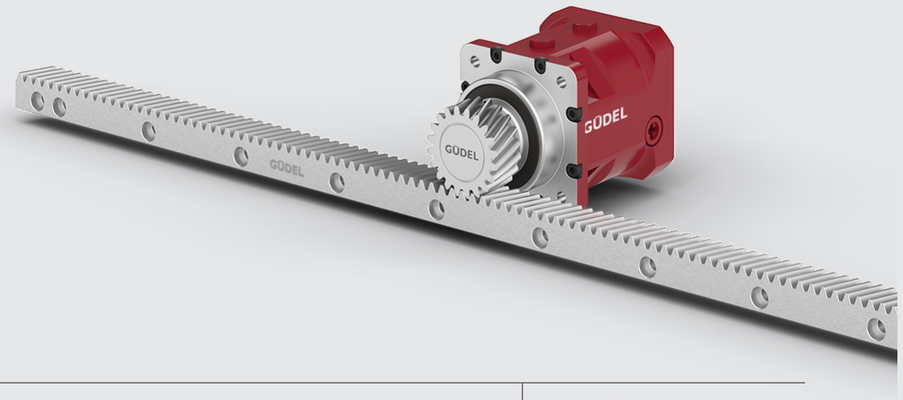

Pinion

Helical tooth, Modular pitch

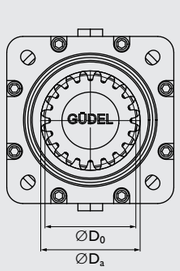

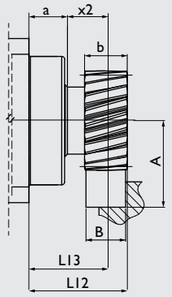

Hardened and ground

Material 16MnCr5 DIN 1.7131
Teeth pressure angle α = 20°, helical teeth left, 19°31'42"
hardened (58^{+4}_{0} HRCHRC), ground, crowned
Quality 6f24 DIN 3962 / 63 / 67
f_p [mm] Adjacent pitch error 0.006

Geometrical Information

Size	m	z	A	b	D_a	D_0	P	L12	L13	x2	a	M
080	2	20	43.221	25	46.44	42.441	0	52.5	40	20	20	0.3
100	2	25	48.526	25	57.05	53.052	0	63.3	49.8	23.8	27	0.4
	3	20	57.831	30	69.66	63.662	0	69	55.5	27	27	0.7
140	3	22	61.014	30	76.03	70.028	0	69.5	56	27.5	27	0.8
	4	20	77.441	40	92.88	84.883	0	79	65.5	32	27	1.6
180	4	20	77.441	40	92.88	84.883	0	79	65.5	32	27	1.5
	5	20	87.052	50	116.1	106.103	0	89.5	73.5	32.5	32	3.0
240	5	24	97.662	50	137.32	127.324	0	112.5	92.5	47.5	40	5.4
	6	20	106.662	60	139.32	127.324	0	111	91	41	40	5.6

m: Module, z: Number of teeth, P: profile shift coefficient, M: weight [kg]

Rack

Helical tooth, Modular pitch

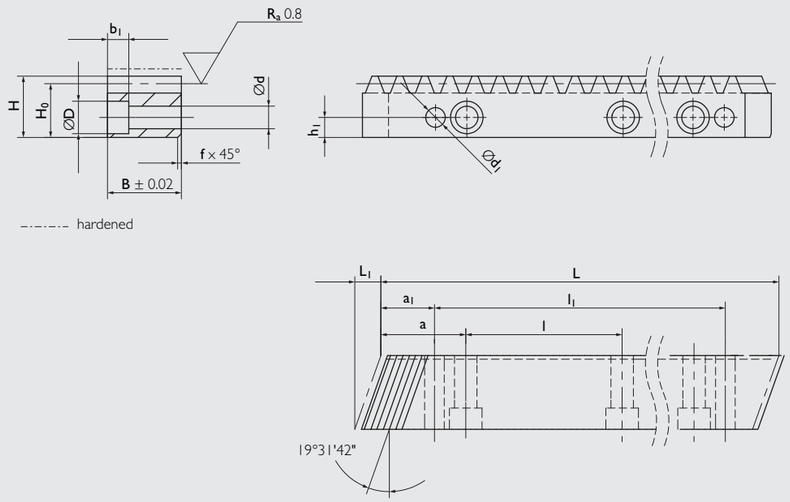

Hardened and ground

Material C45E DIN 1.1191
On request: 1.7131 (16MnCr5)
Profil all faces ground
Teeth pressure angle α = 20°
helical tooth system right
helix angle 19° 31'42"
hardened (54^{+4}_{0} HRC) and ground
Quality 6h23 DIN 3962/63/67
f_p [mm] Adjacent pitch error
Modul M ≤ 3 ; 0.006
Modul M > 3 ; 0.008
p_f [mm] Tolerance of cut for continuous mounting -0.05/-0.2
F_{pL} [mm] based on length L
Cumulative pitch error

Geometrical Information

Size	p_t	m	L	L_1	z	B	H	H_0	f+0.5	a	l	h_1	d	D	b_1	a_1	l_1	d_1	F_{pL}	M	Part No.
080 100	6.67	2.0	500.00	8.5	75	24	24	22.00 0/-027	2	62.5	125.00	8	7	11	7	31.7	436.6	5.7	0.025	2.1	246022
	6.67		1000.00		150												936.6		0.036	4.1	246023
	6.66		2000.00		300												1936.6		0.058	8.2	246024
100 140	10.00	3.0	500.00	10.3	50	29	29	26.00 0/-034	2	62.5	125.00	9	10	15	9	35.0	430.0	7.7	0.028	3.0	246042
			1000.00		100												930.0		0.037	5.9	246043
			2000.00		200												1930.0		0.054	11.2	246044
140 180	13.33	4.0	506.67	13.8	38	39	39	35.00 0/-034	3	62.5	125.00	12	10	15	9	33.3	433.0	7.7	0.030	5.4	246052
			1000.00		75												933.4		0.036	10.7	246053
			2000.00		150												1933.4		0.050	20.5	246054
180 240	16.67	5.0	500.00	17.4	30	49	39	34.00 0/-034	3	62.5	125.00	12	14	20	13	37.5	425.0	11.7	0.028	6.5	246062
	16.67		1000.00		60												925.0		0.034	13.1	246063
	16.66		2000.00		120												1925.0		0.045	24.5	246064
240	20.00	6.0	500.00	20.9	25	59	49	43.00 0/-041	3	62.5	125.00	16	18	26	17	37.5	425.0	15.7	0.031	10.0	246072
			1000.00		50												925.0		0.036	19.9	246073
			2000.00		100												1925.0		0.046	36.5	246074

m: Module, z: Number of teeth, p_t: profile shift coefficient, M: weight [kg]

Order Reference

Generate the Code of your Planetary Gearbox

Output Shafts (excl. Output Pinion)

D32 - L58

D Diameter [mm]

L Shaft length [mm]

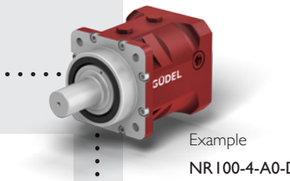

Example
NR100-4-A0-D32-L58-TP-P3-AM

Range	Size		Ratio		Configuration			Position		Precision		Input		Motor
NR	100	-	4	-	A	0	-	TP	-	P3	-	AM	-	

NR High Performance
SR High Torque
PR Hyper Torque

Add x for special gearbox. Not defined in the standard reference. A unique study number will be assigned.

080
100
140
180
240

A Small
B Medium
C Long

0 Smooth
1 Keyway
3 Custom
4 Hollow
5 Spline

2 Pinion

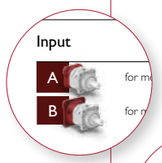

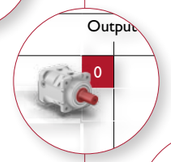

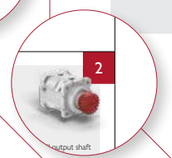

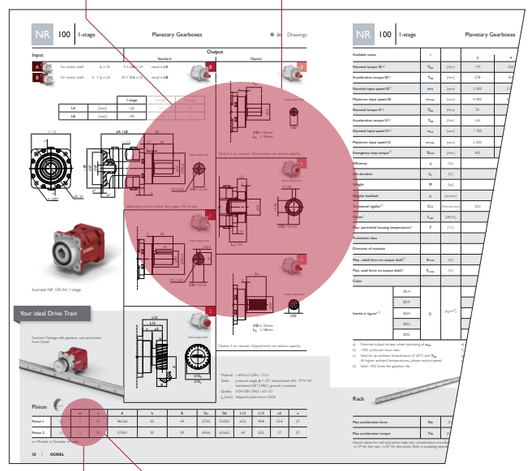

Output Pinion

z20 - m3H

z Number of teeths

m Module

H Helical teeth
S Straight teeth

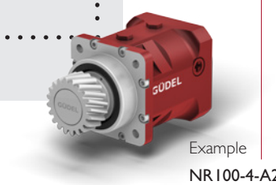

Example
NR100-4-A2-z20-m3H-TP-P3-AM

H1 Horizontal
V1 Upright
V2 Downside
TP All Positions*

*Add B for Option Breather. Reduces the pressure in S1.

P Precision [arcmin]

AM Motor adaptation
AC Keyway shaft
AL Smooth shaft

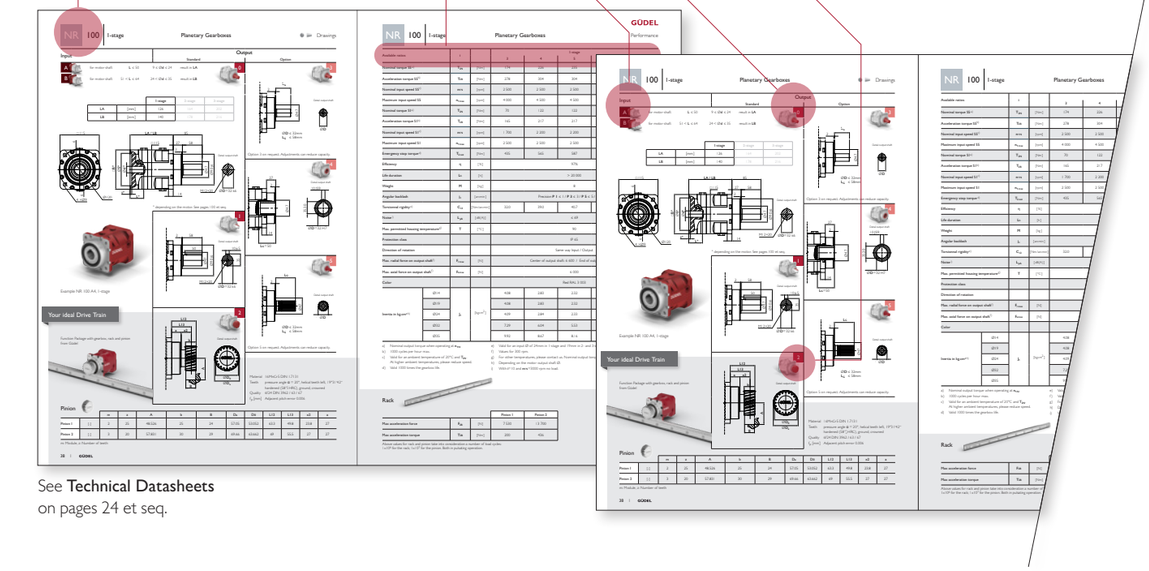

See **Technical Datasheets** on pages 24 et seq.

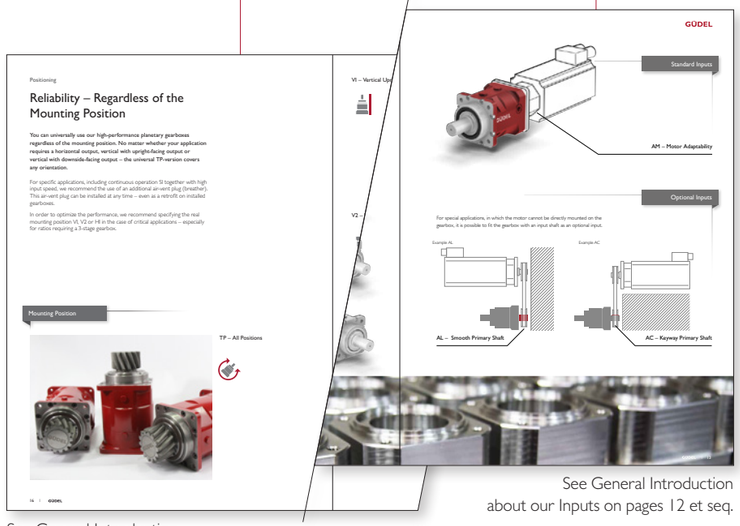

See General Introduction about our Positioning on pages 16 et seq.

See General Introduction about our Inputs on pages 12 et seq.

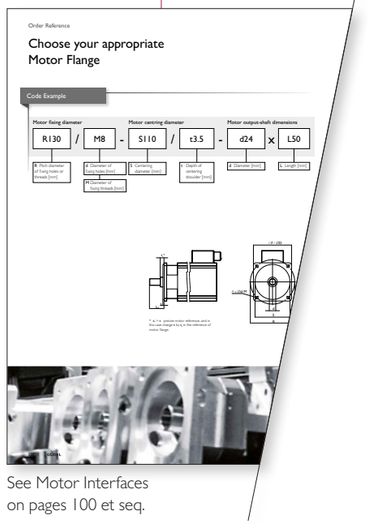

See Motor Interfaces on pages 100 et seq.

Order Reference

Choose your appropriate Motor Interface

Code Example

Motor Fixing Diameter			Motor Centring Diameter			Motor Output Shaft Dimensions		
R130	/	M8	- S110	/	t3.5	- d24	x	L50

- **R** Pitch diameter of fixing holes or threads [mm]
- **Ød** Diameter of fixing holes [mm]
- **M** Diameter of fixing threads [mm]
- **S** Centering diameter [mm]
- **t** Depth of centering shoulder [mm]
- **d** Diameter [mm]
- **L** Length [mm]

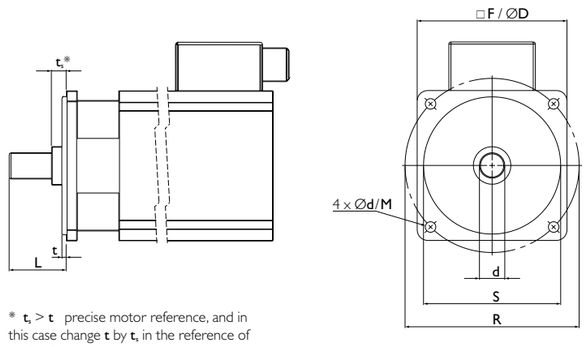

* $t_1 > t$ precise motor reference, and in this case change **t** by t_1 in the reference of motor flange.

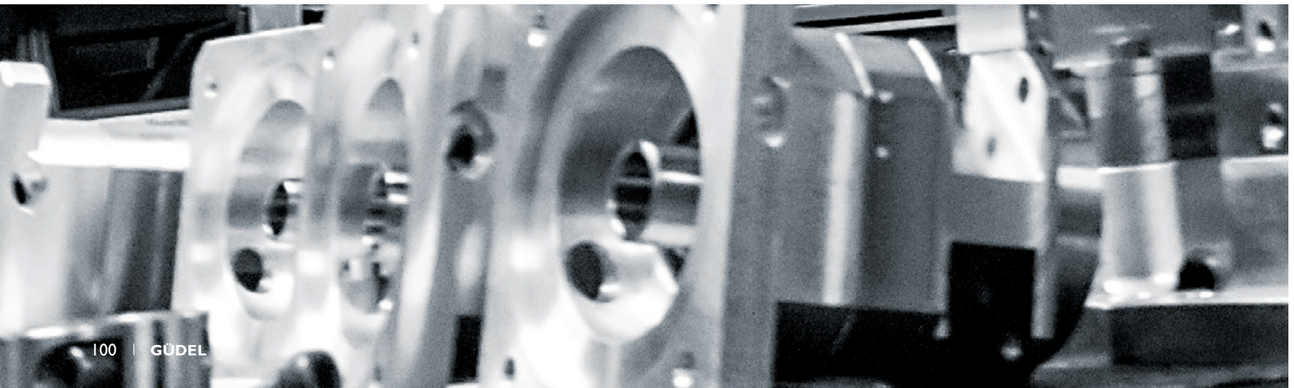

Motor					Gearbox Size					Code
R	Ød/M	S	t	dxL	080	100	140	180	240	
63	d4.5	40	2.5	9×20	A	A				R63 / d4.5-S40 / t2.5-d9×20
63	d5.5	40	2.5	9×25	A	A				R63 / d5.5-S40 / t2.5-d9×25
64	d5.4	40	2	9×20	A	A				R64 / d5.4-S40 / t2-d9×20
70	d4.5	40	2.5	9×20	A	A				R70 / d4.5-S40 / t2.5-d9×20
70	d4.5	50	3	11×30	A	A				R70 / d4.5-S50 / t3-d11×30
70	d5.5	50	3	14×30	A	A	A			R70 / d5.5-S50 / t3-d14×30
75	d5.5	60	2.5	11×23	A	A				R75 / d5.5-S60 / t2.5-d11×23
75	d5.5	60	2.5	14×30	A	A	A			R75 / d5.5-S60 / t2.5-d14×30
75	d5.5	60	3	14×30	A	A	A			R75 / d5.5-S60 / t3-d14×30
75	d5.8	60	2.5	11×23	A	A	A			R75 / d5.8-S60 / t2.5-d11×23
75	d6.5	60	3	14×30	A	A				R75 / d6.5-S60 / t3-d14×30
90	d6	70	3	19×35	A	A	A	A		R90 / d6-S70 / t3-d19×35
90	d7	70	3	14×30	A	A	A	A		R90 / d7-S70 / t3-d14×30
90	d7	70	3	16×40	A	A	A	A		R90 / d7-S70 / t3-d16×40
72 / 75	6.5	60	3	14×30	A	A				R72-75(Slot) / d6.5-S60 / t3-d14×30
95	d6.6	50	2.5	14×30	A	A	A			R95 / d6.6-S50 / t2.5-d14×30
100	d7	80	3	14×30	A	A	A	A		R100 / d7-S80 / t3-d14×30
100	d7	80	3	19×40	A	A	A	A		R100 / d7-S80 / t3-d19×40
100	d6.5	80	2.5	14×30	A	A	A			R100 / d6.5-S80 / t2.5-d14×30
100	d6.5	80	3	19×40	A	A	A	A		R100 / d6.5-S80 / t3-d19×40
100	d6.6	80	4	10×32	A	A				R100 / d6.6-S80 / t4-d10×32
100	d6.6	80	5	14×37	A	A	A			R100 / d6.6-S80 / t5-d14×37
100	d6.6	80	5	16×40	A	A	A	A		R100 / d6.6-S80 / t5-d16×40
115	d9	95	3	19×40	A	A	A	A		R115 / d9-S95 / t3-d19×40
115	d7	95	3	24×45	A	A	A	A	A	R115 / d7-S95 / t3-d24×45
115	d11	95	3	19×40	A	A	A	A		R115 / d11-S95 / t3-d19×40
130	d9	95	3	19×40	A	A	A	A		R130 / d9-S95 / t3-d19×40
130	d9	95	3	24×50	B	A	A	A	A	R130 / d9-S95 / t3-d24×50
130	d9	110	3	24×50	B	A	A	A	A	R130 / d9-S110 / t3-d24×50
130	d9	110	3.5	24×50	B	A	A	A	A	R130 / d9-S110 / t3.5-d24×50
130	d11	110	3.5	19×40	A	A	A	A		R130 / d11-S110 / t3.5-d19×40
130	M8	110	3.5	24×50	B	A	A	A	A	R130 / M8-S110 / t3.5-d24×50
130	M8	110	3.5	28×60		B	B	A	A	R130 / M8-S110 / t3.5-d28×60
130	M8	110	3.5	38×80			C	B	A	R130 / M8-S110 / t3.5-d38×80
145	d9	110	6	19×55	B	B	B	A		R145 / d9-S110 / t6-d19×55
145	d9	110	6	28×63		B	B	B	A	R145 / d9-S110 / t6-d28×63
145	d10	110	3.5	16×40	A	A	A	A		R145 / d10-S110 / t3.5-d16×40
165	d11	130	3	28×60		B	B	A	A	R165 / d11-S130 / t3-d28×60
200	13.5	114.3	3.2	35×79			C	B	A	R200 / d13.5-S114.3 / t3.2-d35×79
200	13.5	114.3	3.2	42×113				C*	B	R200 / d13.5-S114.3 / t3.2-d42×113
165	d11	130	3.5	19×28	B	A	A	A		R165 / d11-S130 / t3.5-d19×28
165	d11	130	3.5	24×50	B	A	A	A	A	R165 / d11-S130 / t3.5-d24×50
165	d11	130	3.5	32×58		B	B	A	A	R165 / d11-S130 / t3.5-d32×58
165	d11	130	4	32×58		B	B	A	A	R165 / d11-S130 / t4-d32×58
215	d14	130	4	32×60		B	B	A	A	R215 / d14-S130 / t4-d32×60
215	d14	130	4	38×60		B	B	A	A	R215 / d14-S130 / t4-d38×60
190	d11	155	3	32×60		B	B	A	A	R190 / d11-S155 / t3-d32×60
190	d11	155	3	35×60		B	B	A	A	R190 / d11-S155 / t3-d35×60
215	d13.5	180	4	28×60		B	B	A	A	R215 / d13.5-S180 / t4-d28×60
215	d13.5	180	4	38×80			C	B	A	R215 / d13.5-S180 / t4-d38×80
215	d14	180	4	28×42		A	A	A	A	R215 / d14-S180 / t4-d28×42
215	d14	180	4	28×60		B	B	A	A	R215 / d14-S180 / t4-d28×60
215	d14	180	4	32×58		B	B	A	A	R215 / d14-S180 / t4-d32×58
215	d14	180	4	32×60		B	B	A	A	R215 / d14-S180 / t4-d32×60
215	d14	180	4	32×80			C	B	A	R215 / d14-S180 / t4-d32×80
215	d13.5	180	4	38×80			C	B	A	R215 / d13.5-S180 / t4-d38×80
265	d13	230	4	38×80			C	B	A	R265 / d13-S230 / t4-d38×80
265	d14	230	4	55×110				C	B	R265 / d14-S230 / t4-d55×110
300	d18	250	5	42×110				C	B	R300 / d18-S250 / t5-d42×110
300	d18	250	5	48×82				B	A	R300 / d18-S250 / t5-d48×82
300	d18	250	5	48×110				C	B	R300 / d18-S250 / t5-d48×110
300	d19	250	5	48×110				C	B	R300 / d19-S250 / t5-d48×110

* On request.

Calculate your Planetary Gearbox

This outline enables you to select your gearbox quickly. If you know which motor you will be using, you can create a preliminary design for your application.

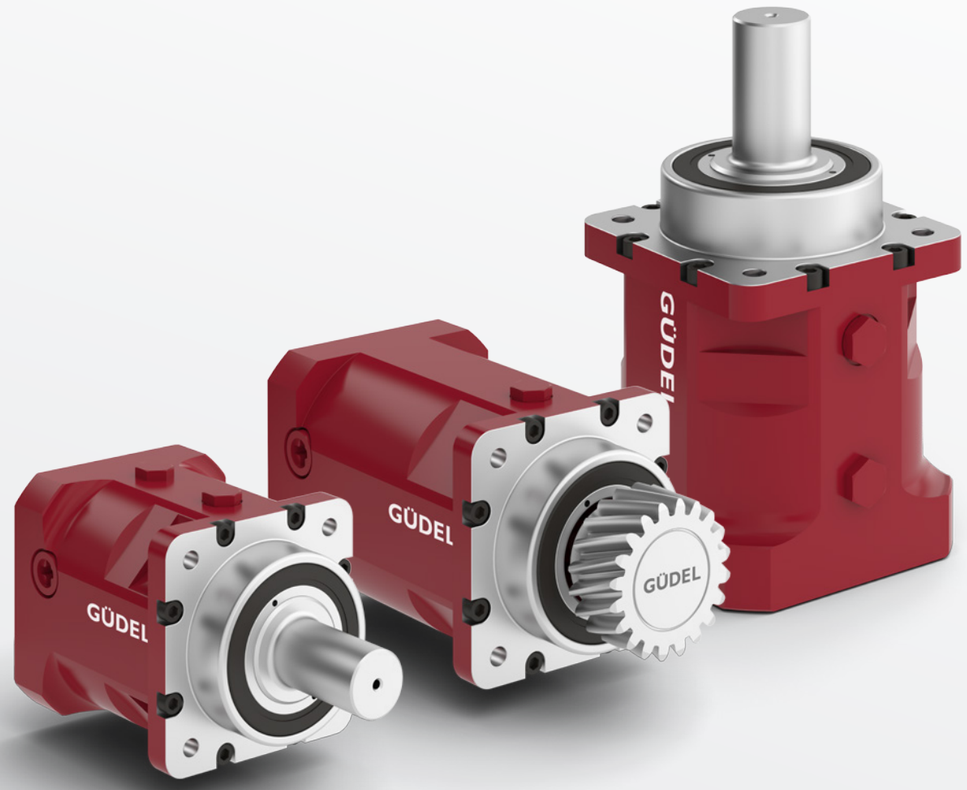

Quick Selection

ED Duty Cycle
$T_{max\,mot}$ Max. acceleration motor torque
i Reduction ratio
$T_{1n\,mot}$ Nominal motor torque

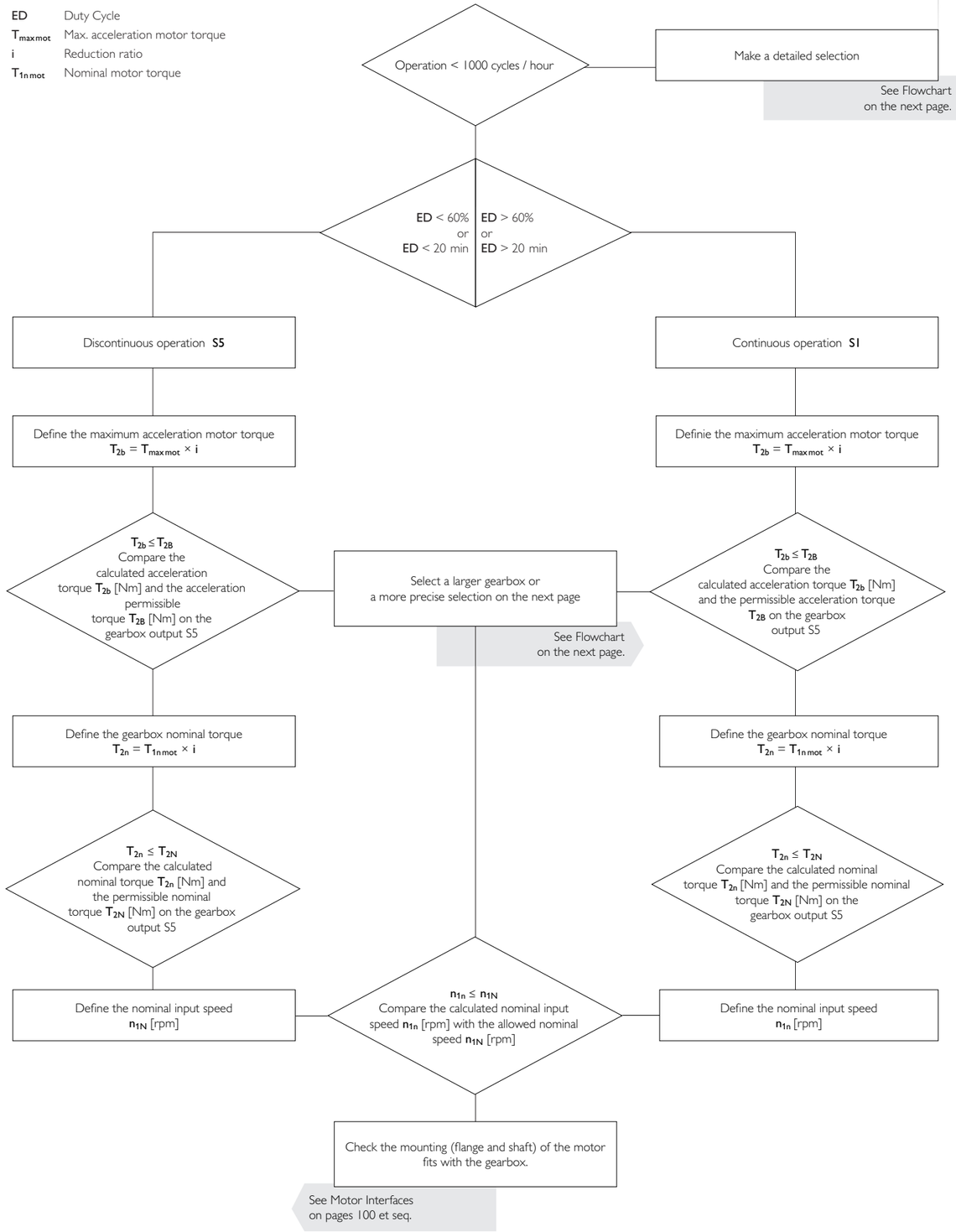

Detail Selection

$ED = (t_b + t_c + t_d) / (t_b + t_c + t_d + t_e) \times 100\,\%$

$ED = t_b + t_c + t_d$ [min]

$Z_h = \dfrac{3600\ [s/h]}{(t_b + t_c + t_d + t_e)}$

F depend on Z_h (see Board I)

T_{2b} under application

$T_{2bfs} = T_{2b} \times f_s$

n_{2max} under application

i depend on:

- n Necessary output rotation speed (under application)
- Λ Depending on inertia ratio, indicative value: $1 \leq \Lambda \leq 10$
  - $n_{1max} = n_{2max} \times i$
  - $n_{1max} = n_{1maxmot}$
- T Depending on the output torque and the driving torque
  - $T_{1b} = T_{2b} \times (1 / i) \times (1 / \eta)$
  - $T_{1b} < T_{maxmot}$

T_{2not} under application

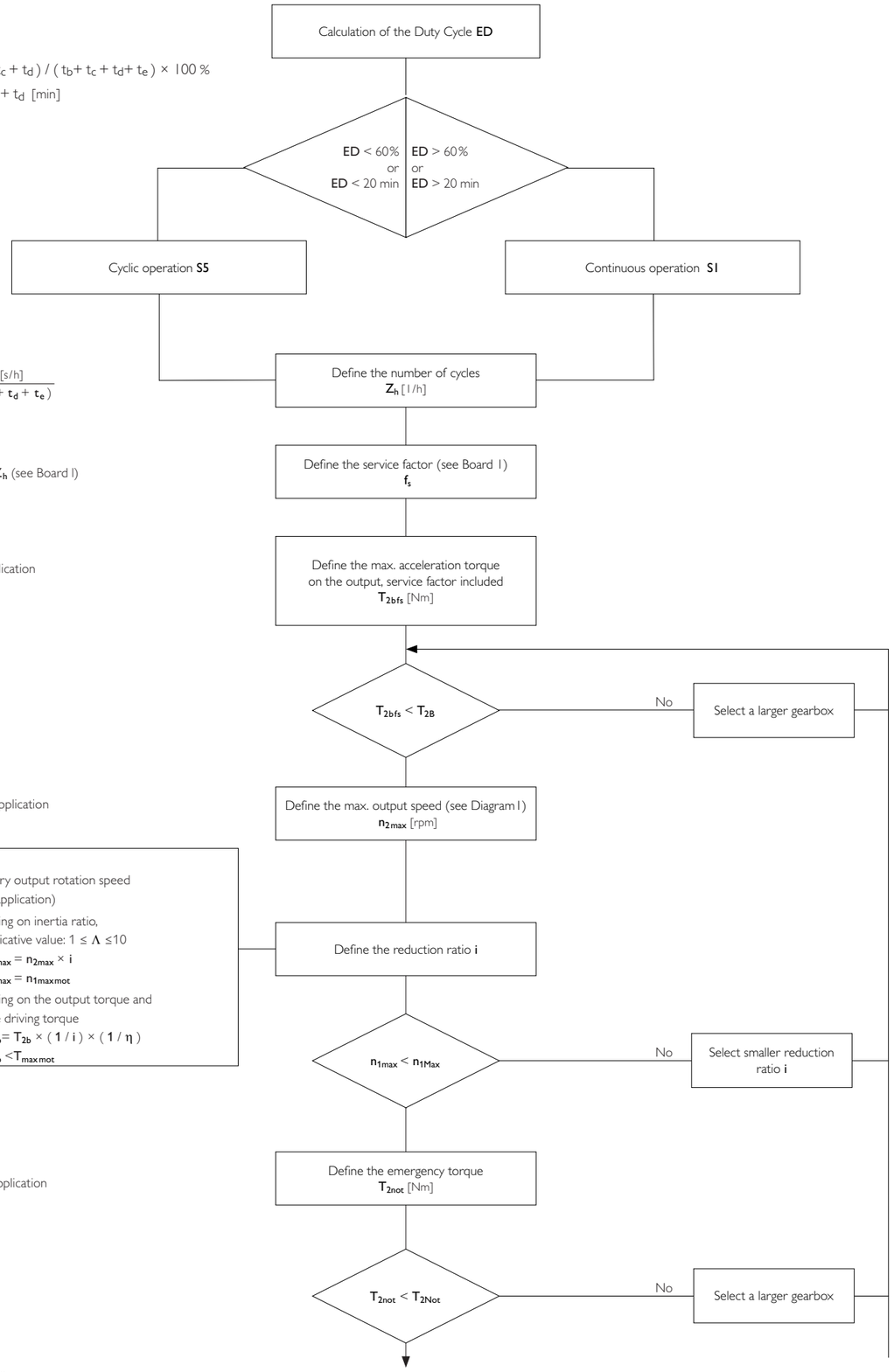

$T_{2m} = \sqrt[3]{\dfrac{|n_{2b}| \times t_b \times |T_{2b}|^3 + \ldots + |n_{2n}| \times t_n \times |T_{2n}|^3}{|n_{2b}| \times t_b + \ldots + |n_{2n}| \times t_n}}$

$n_{2m} = \dfrac{|n_{2b}| \times t_b + \ldots + |n_{2n}| \times t_n}{t_b + \ldots + t_n}$

including dwell

$n_{1m} = n_{2m} \times i$

$D_{W.Mot} < D_{tightening\ hub}$

The motor shaft should be inserted a good distance into the tightening hub.

The motor shaft should be inserted a good distance into the tightening hub without effort.

$T_{2maxmot} = T_{1maxmot} \times i \times \eta$

When the engine is under full load, the gear must not be damaged. In the case of damage, limit the motor current.

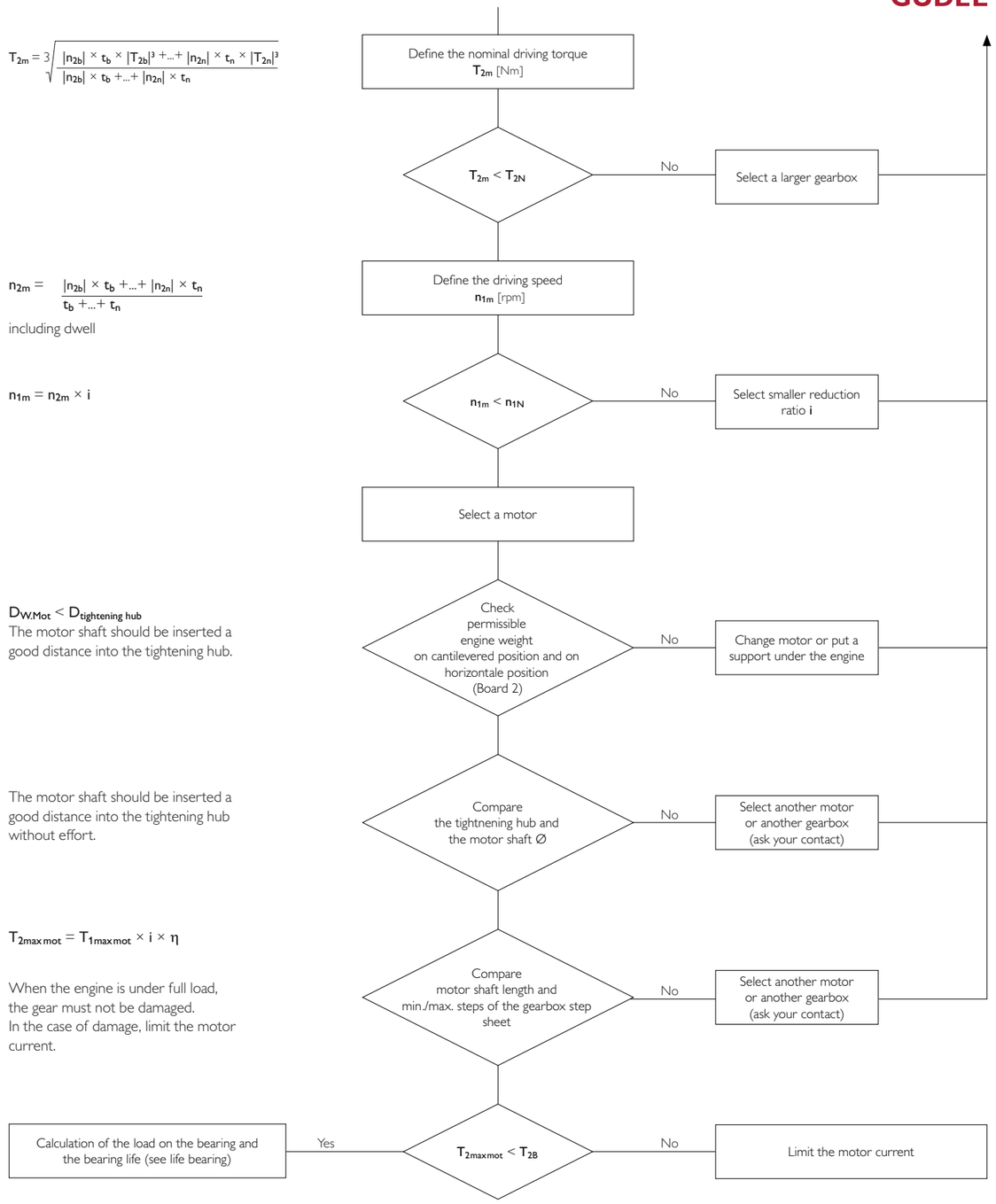

Diagram I

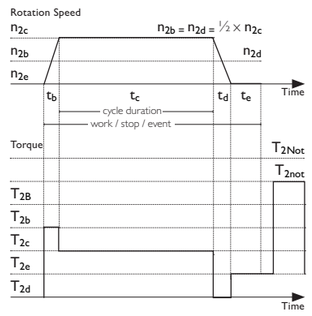

Board I

Number of cycles p. h.	Z_h	[1/h]	1000	1500	2000	3000	4000	5000	6000	7000	8000	9000	10000
Shock factor	f_s	[-]	1	1.1	1.3	1.6	1.72	1.8	1.9	1.95	2	2.05	2.07

Board 2

Size	080	100	140	180	240
Max. motor weight	9.3	20	37	74	150

Calculate your ideal Drive Train

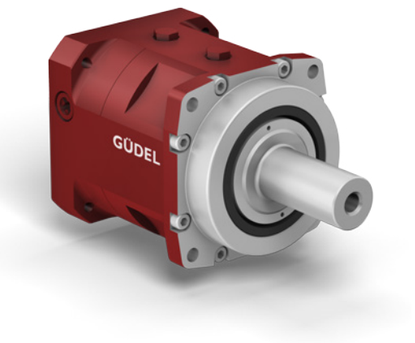

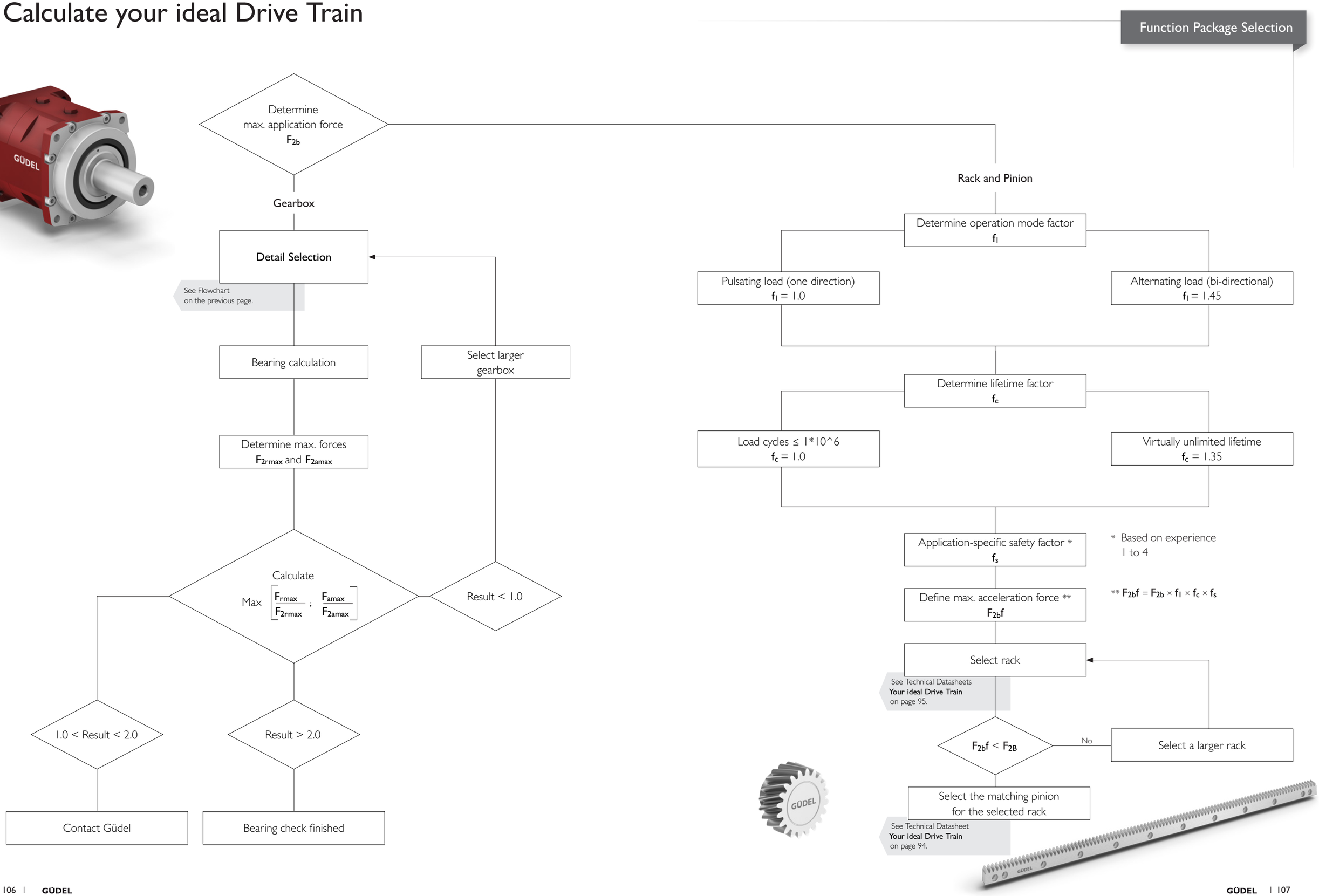

Güdel worldwide

Contact Details & Links

Americas

Brazil
Güdel Lineartec
Comércio de Automção Ltda.
Rua Américo Brasiliense
n° 2170, cj. 506
Chácara Santo Antonio
São Paulo, CEP 04715-005
info@ch.gudel.com

Mexico
Güdel TSC S.A. de C.V.
Gustavo M. Garcia 308
Col. Buenos Aires
Monterrey, N.L. 64800
Phone +52 81 8374 – 2500
info@mx.gudel.com
www.gudel.com/mx

USA
Güdel Inc.
4881 Runway Blvd.
Ann Arbor, MI 48108
Phone +1 734 214 0000
info@us.gudel.com
www.gudel.com/us

Europe

Switzerland
Güdel AG (Headquarters)
Gaswerkstrasse 26
Industrie Nord
4900 Langenthal
Phone +41 62 916 91 91
info@ch.gudel.com

Austria
Güdel GmbH
Schöneringer Strasse 48
4073 Wilhering
Phone +43 7226 206900
info@at.gudel.com

Netherlands
Güdel AG
Echelpoelweg 1b
7595 KA Weerselo
Phone +31 541 66 22 50
info@nl.gudel.com

Czech Republic
Güdel a.s.
Holandská 4
63900 Brno
Phone +420 519 323 431
info@gudel.cz
www.gudel.com/cz

France
Güdel SAS
Tour de l'Europe 213
3 Bd de l'Europe à Mulhouse
68100 Mulhouse
Phone +33 1 30091545
info@fr.gudel.com
www.gudel.com/fr

Güdel Sumer SAS
Le Roqual
Zone industrielle
Carsac-Aillac
24200 Sarlat-la-Canéda
Phone +33 5 53 30 30 80
info@gudel-sumer.com
www.gudel-sumer.com

Germany
Güdel GmbH
Rosenberger Strasse 1
74706 Osterburken
Phone +49 6291 6446 0
info@de.gudel.com

Güdel GmbH
Carl – Benz – Strasse 5
63674 Altenstadt
Phone +49 6047 9639 0
info@de.gudel.com

Güdel Automation GmbH
Industriestrasse 8
86720 Nördlingen
Phone +49 9081 2974 0
info@de.gudel.com

Güdel Controls GmbH
Gewerbestrasse 4a
83404 Ainring
Phone +49 8654 4888 0
info.gudel-controls@de.gudel.com
www.gudel-controls.de

Güdel Intralogistics GmbH
Gewerbegebiet Salzhub 11
83737 Irschenberg
Phone +49 8062 7075 0
intralogistics@de.gudel.com
www.gudel-intralogistics.com

United Kingdom
Güdel Lineartec (U.K.) Ltd.
Unit 5 Wickmans Drive
Coventry, West Midlands
CV4 9XA
Phone +44 24 7669 544
info@uk.gudel.com

Italy
Güdel S.r.l.
Via per Cernusco, 7
20060 Bussero (Mi)
Phone +39 02 9217021
info@it.gudel.com
www.gudel.com/it

Poland
Güdel Sp. z o.o.
ul. Legionów 26/28
43-300 Bielsko – Biała
Phone +48 33 819 01 25
info@pl.gudel.com
www.gudel.com/pl

Russia
Güdel AG
Yubileynaya 40
Office 1902
445057 Togliatti
Phone +7 97 975 0802
info@ru.gudel.com
www.gudel.com/ru

Spain
Güdel AG
C/Industria 60, Local 7
08025 Barcelona
Phone +34 93 476 03 80
info@es.gudel.com
www.gudel.com/es

Turkey
Güdel Otomasyon Ltd. Şti.
Perpa Ticaret Merkezi
B Blok Kat 11 No. 1593
34384 Okmeydanı/Şişli, Istanbul
Phone +90 532 316 94 44
info@tr.gudel.ch

Asia Pacific

China
Güdel International Trading
(Shanghai) Co. Ltd.
3506 The King Tower
No. 28 New Jin Qiao Road, Pudong
Shanghai 201206
Phone +86 21 5055 0012
info@cn.gudel.com
www.gudel.com/cn

Güdel Automation
Engineering Co. Ltd.
No. 3 Building Lingang
Industrial Park (Phase 2)
No. 1500 Cenglin Road, Pudong
Shanghai 201206
Phone +86 21 20926998
info@cn.gudel.com

India
Güdel India Pvt. Ltd.
Gat no. 458-459
Mauje Kasar Amboli
Pirangut, Tal.Mulshi
Pune 412 111, Maharashtra
Phone +91 20 67910200
info@in.gudel.com
www.gudel.com/in

South Korea
Güdel Lineartec Inc.
7 – 5, Incheon tower-daero
25beon-gil, Yeonsu-gu, Incheon
Post no. 406 - 840
Phone +82 32 858 0541
info@kr.gudel.com

Taiwan
Güdel Lineartec Co. Ltd.
No. 99, An-Chai 8th St.
Hsin-Chu Industrial Park
Hu-Ko, Hsin-Chu
Phone +88 635 97 8808
info@tw.gudel.com

Thailand
Güdel Lineartec Co. Ltd.
19/28 Private Ville Hua Mak Road
Hua Mak Bang Kapi
Bangkok 10240
Phone +66 2 374 0709
info@th.gudel.com

www.gudel.com

GÜDEL

Güdel AG (Headquarters)
Gaswerkstrasse 26
Industrie Nord
4900 Langenthal
Phone +41 62 916 91 91
info@ch.gudel.com
www.gudel.com

EN | 03.15 | 10175508